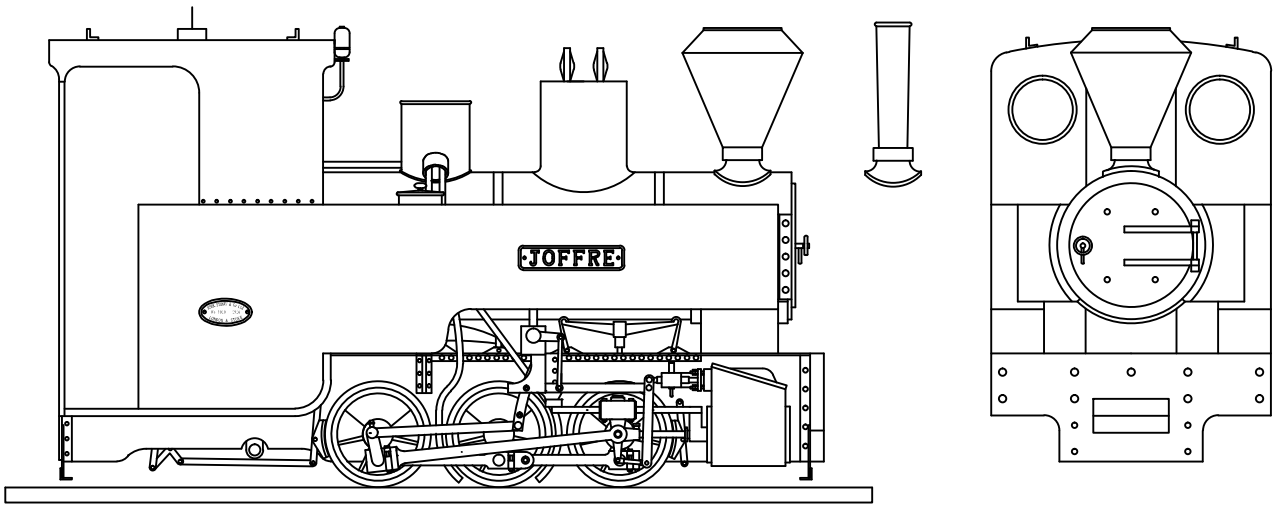

Kerr Stuart Joffre - 7mm = 1foot

Locos n Stuff
Industrial and Narrow Gauge
by Mark Clark
borsig1958@gmail.com
01634 575081 before 8pm

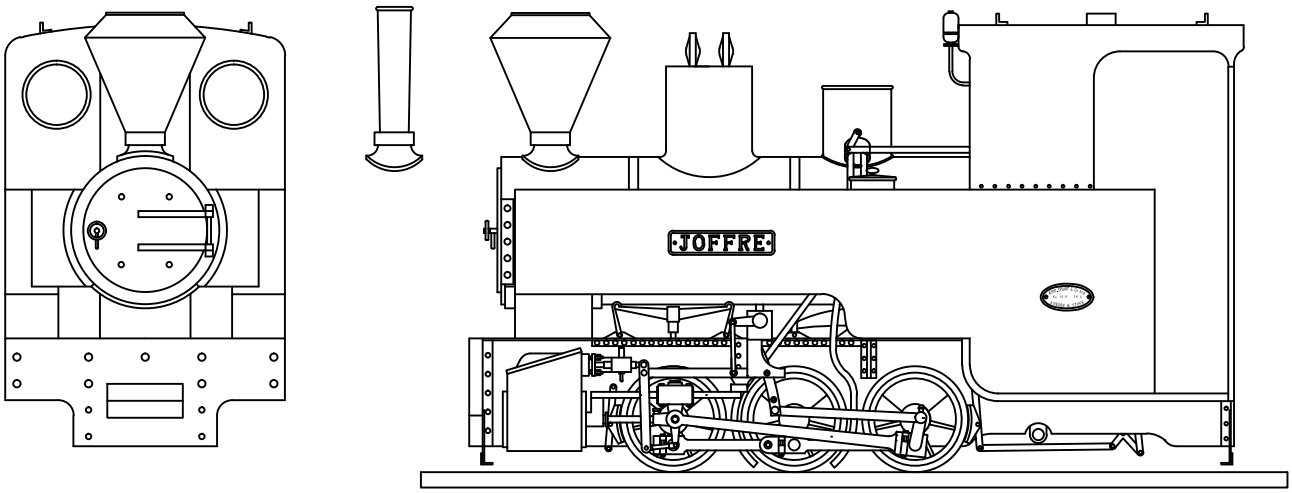

Boiler, cab fittings and rear detail

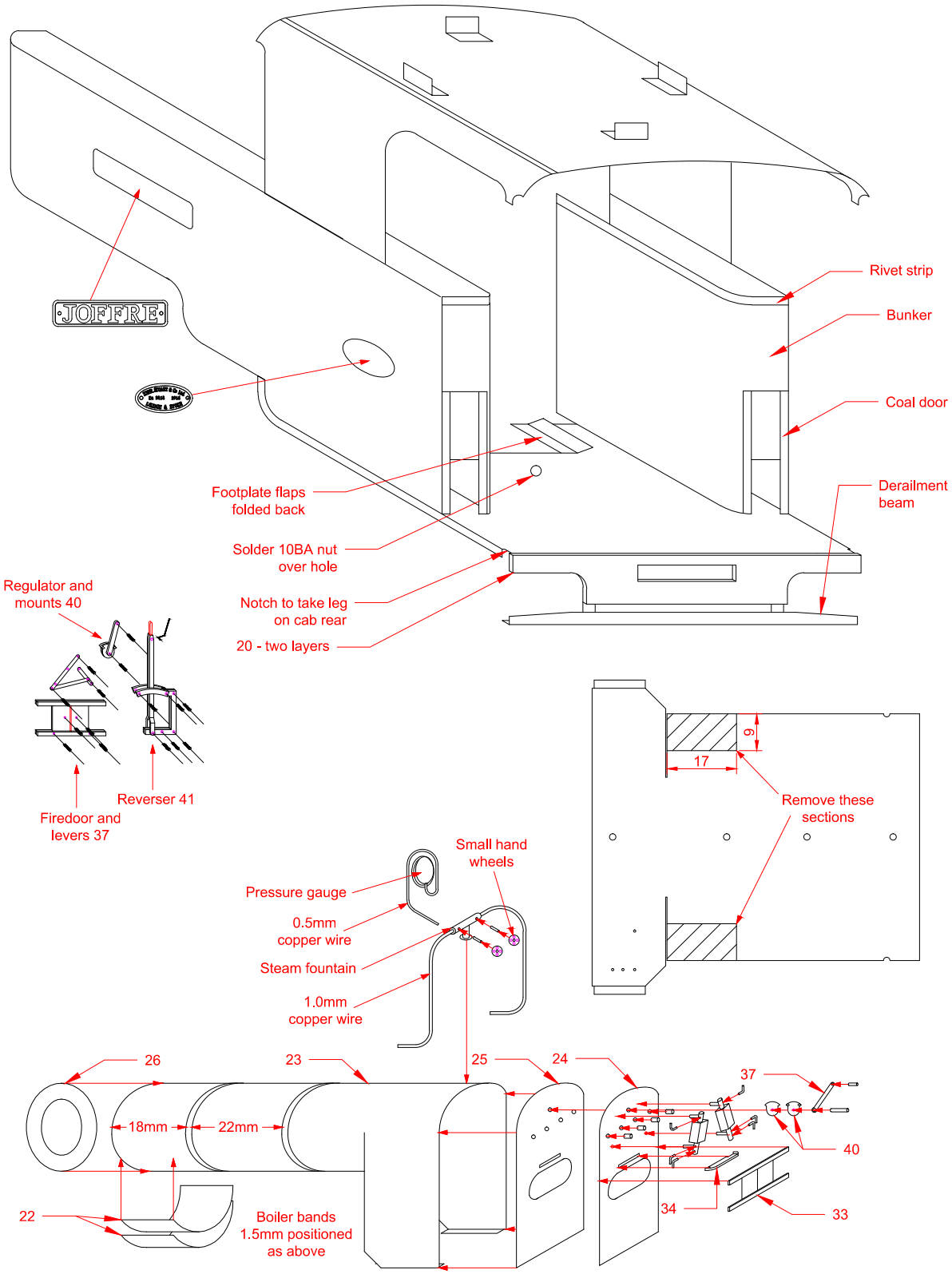

Chassis, cylinders and brake gear

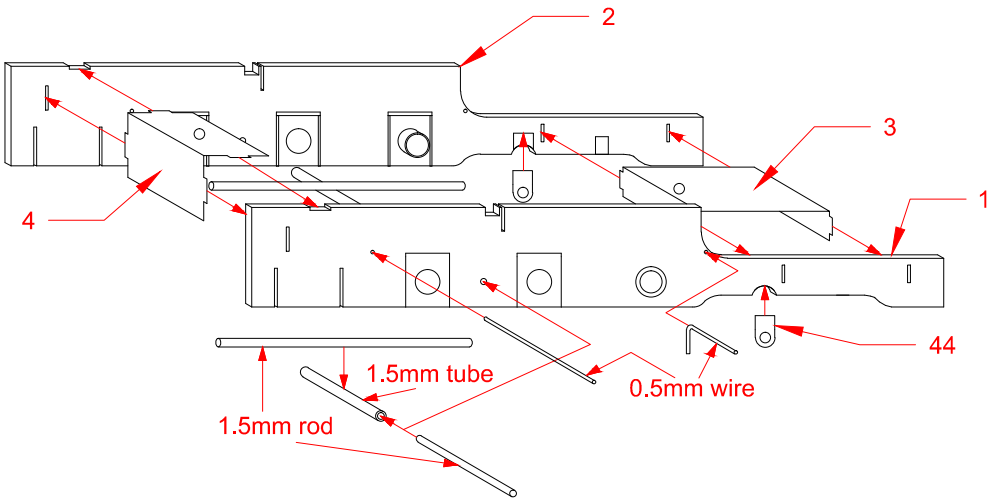

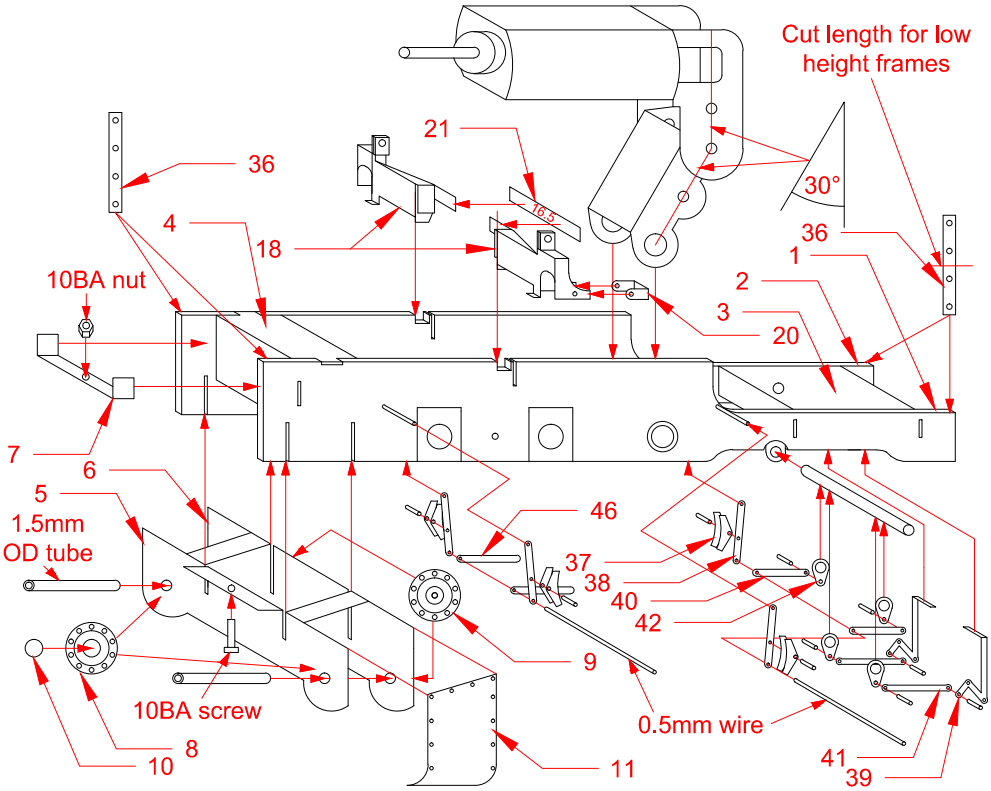

Valve gear and side rods

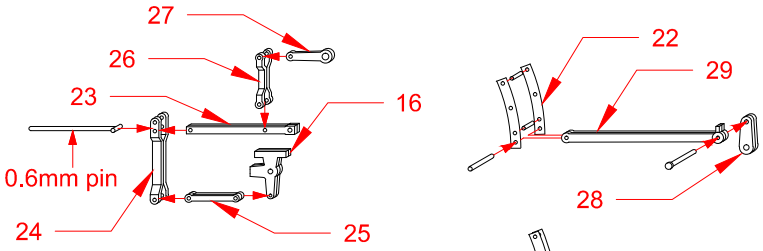

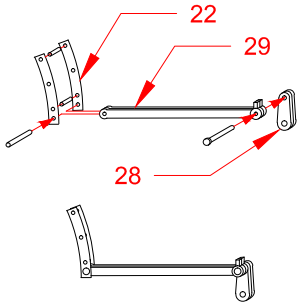

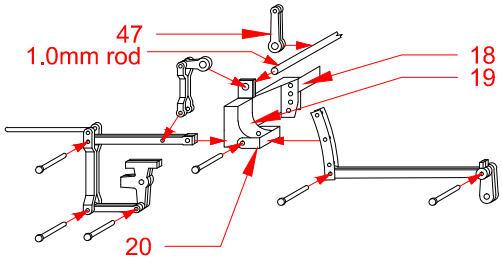

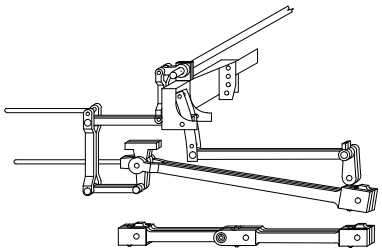

L/H side assembled, R/H is the reverse

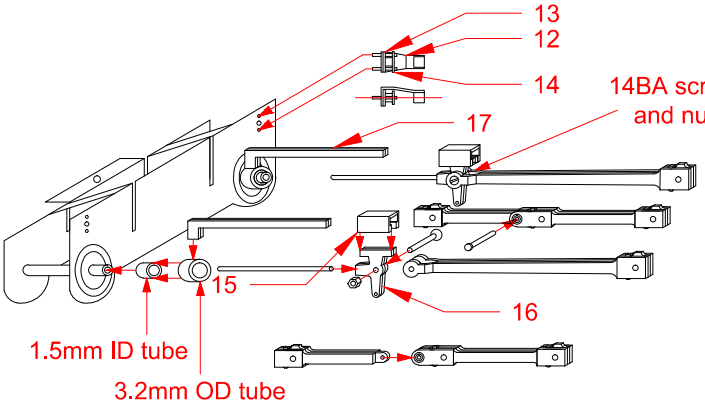

Footplate, tanks and cab

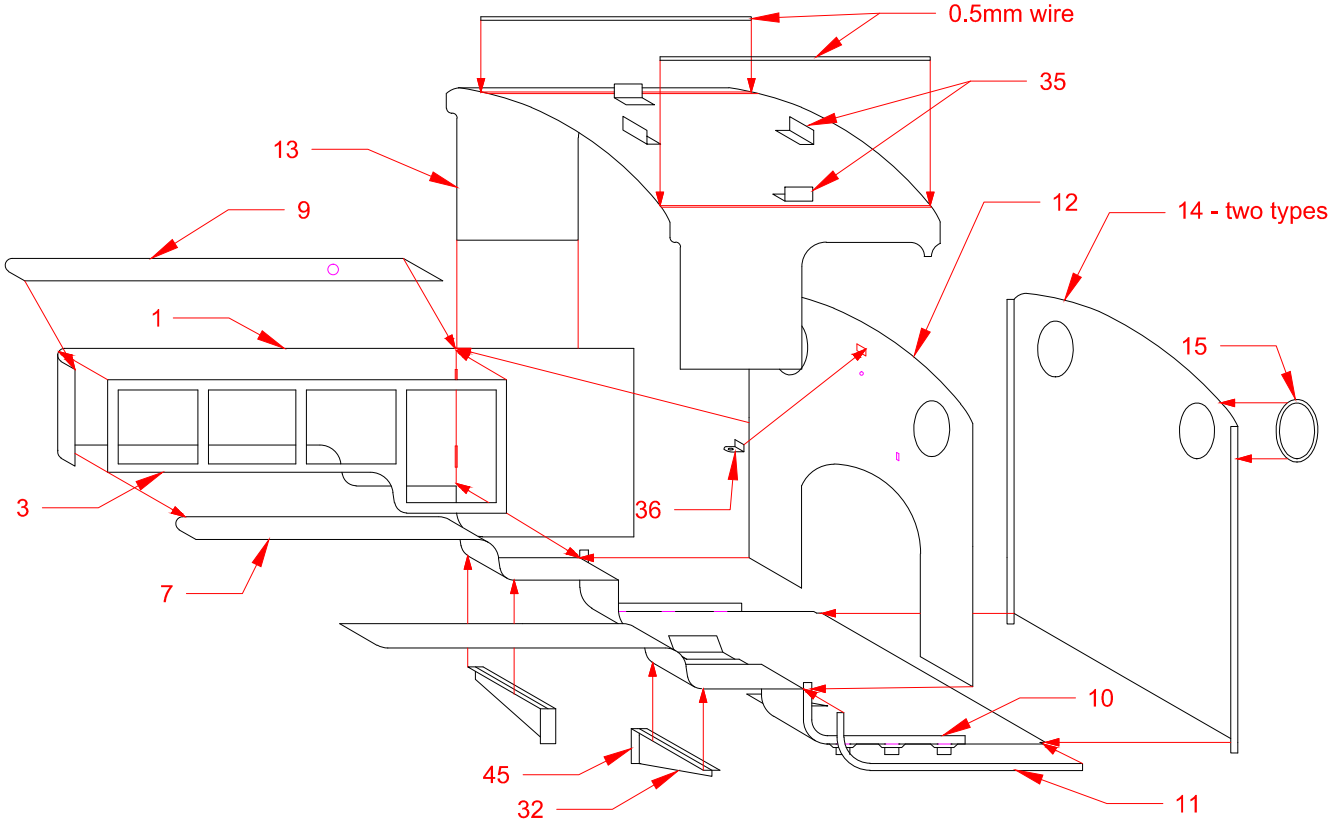

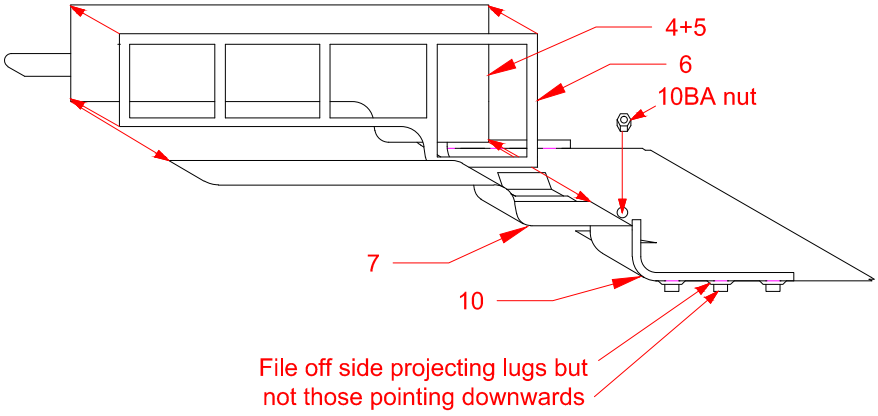

Boiler and front end fittings

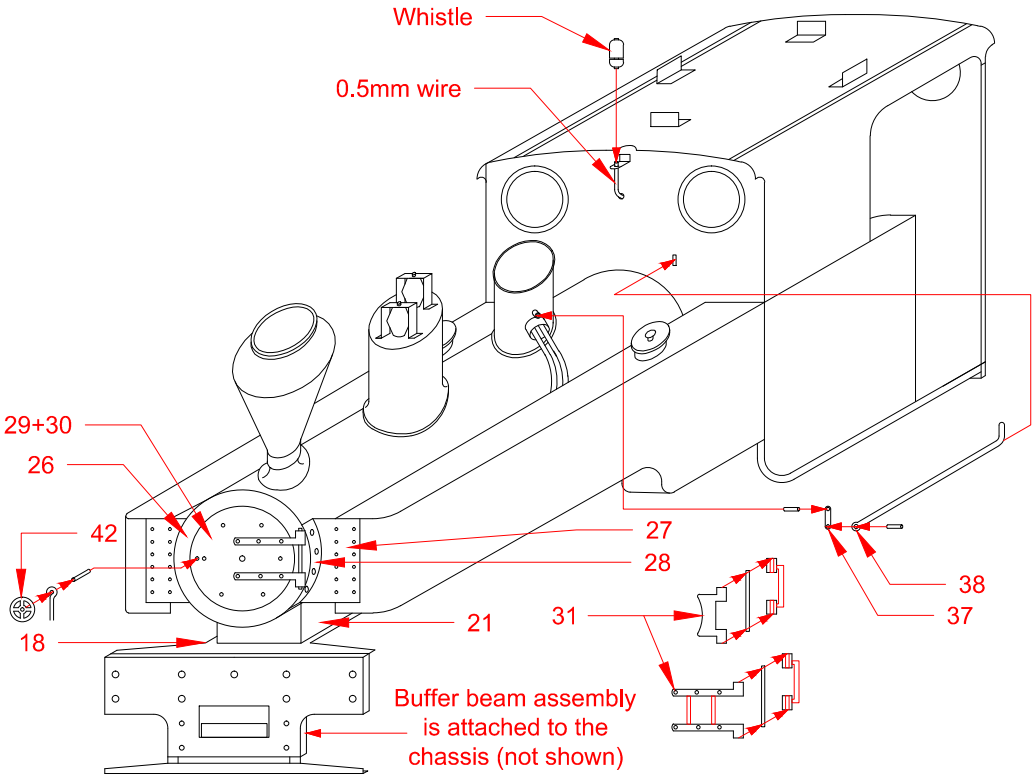

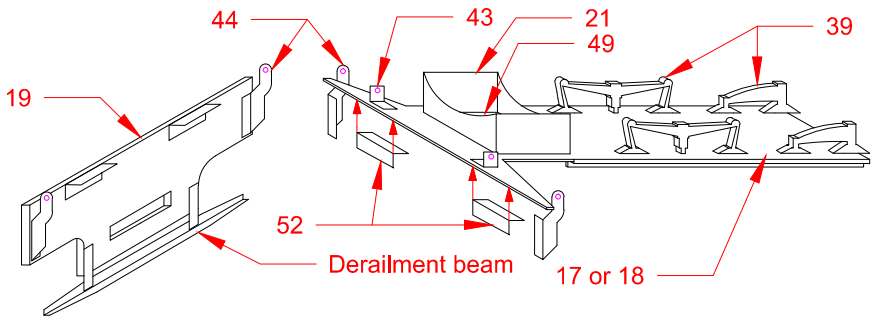

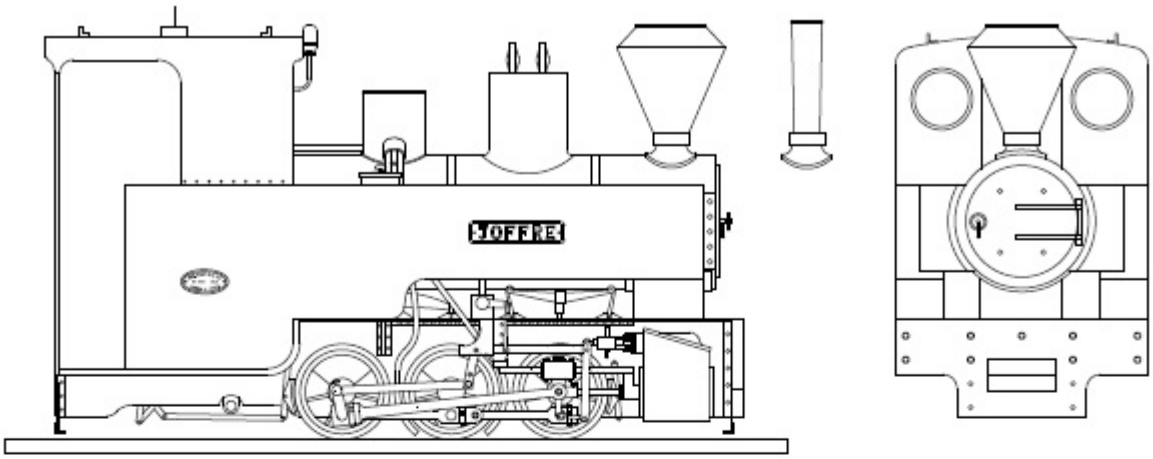

Kerr Stuart Joffre - 7mm = 1foot

Locos n Stuff
Industrial and Narrow Gauge
by Mark Clark
borsig1958@gmail.com
01634 575081 before 8pm

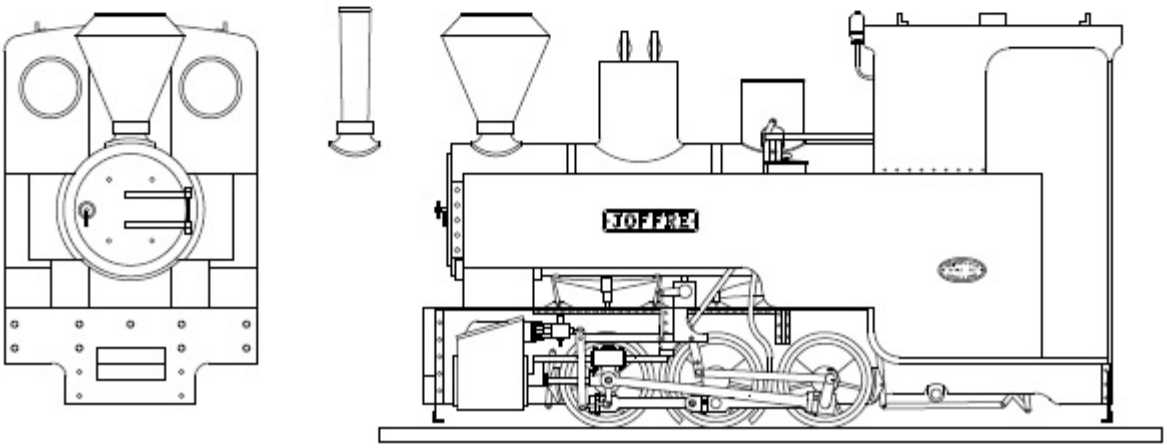

Locos n Stuff
Industrial and Narrow Gauge
• by Mark Clark •
borsig1958@gmail.com
01634 575081 before 8pm

Kerr Stuart Joffre

History

The Joffre class was unofficially named after the French Marshall Joseph Joffre. The French had more than 300 of a similar design by Decauville but needed 70 more, which Decauville could not manage at the time. Kerr Stuart & Co Ltd of Stoke got the order and built 2402 – 2416 in 1915, 2428 – 2457 in 1915 and 2995 – 3019 in 1916. The British version differed in detail, the most obvious being the cab, which was noticeably higher than the French one. Many parts including cylinders, safety valves, injectors and lubricators were in-house Kerr Stuart parts as used on other locos. Kerr Stuart were asked to make a few design changes during construction to help with derailment problems. These included modifications to the springing and compensation levers, but most notably to add a 6cwt front buffer beam to equalise the weight distribution.

All 70 were sent to Nantes by ship via Manchester, but there is almost no documentation telling how they fared in service. Their job was to move men, munitions and supplies from a standard gauge railhead to a staging point near the front line and bring back the wounded. Other locos fulfilling the same role were the Hunslet 4-6-0Ts and Hudswell Clarke 0-6-0WTs and later, after the Americans joined in, the Baldwin and Alco 4-6-0Ts and 2-6-2Ts. From the staging point internal combustion locos would take trains to the trenches. This was far safer than using a steam loco as they didn't give their position away by emitting plumes of smoke; well they didn't when they were new at least.

After the war the surviving locos were put up for sale but records only account for 13. They changed hands through French loco dealers, 5 going to a limestone quarry near Calais, which were spotted as being out of use in 1956. In the early 1970s these 5 were purchased, and brought back to the UK for preservation in 1974. 2405 went to the West Lancashire Ry. near Preston and restoration started in 1995, with completion in 2012. The other 4 went to North Wales and were put on display at the Narrow Gauge Railway Centre, Gloddfa Ganol in Blaenau Ffestiniog. Gloddfa Ganol closed in 1997 and all 5 were sold as follows;
- 2425 became AXE on the Lynton and Barnstable Ry. Although running, it is not very original as many changes have been made to give it a Southern look.
- 2442 went to the Tefi Valley Ry. and restoration was due to start in 2009.
- 2451 was steamed in 2008 and operational in 2009.
- 3010 is now at Statfold Barn, who will no doubt restore it soon.
- 3014 was restored in 2011 for the Apedale Ry. in conjunction with the West Lancashire Ry.
- A final unidentified loco resides in Gabon, Africa.

After the war, left over Joffre parts at Kerr Stuart's works were used to make the Haig class, but resulted in an engine of completely different proportions, despite having essentially the same chassis and boiler.

This kit will make a Joffre in its original form, but not Axe or the Decauville versions. I did consider a kit to cover all types but the differences are too great. For those of you wishing to print the sketches from the CD, the rear view and boiler sketch will not print to scale as it is too big. Print the main drawing of the loco at 99% and the other four at 109%. They should come out at 7mm = 1foot. The odd scaling is to correct the parameters that are used in pdf format and there doesn't seem to be any other solution. Compare the frames with the ones in the drawing and correct the scaling manually with printer settings if it is still wrong.

General

Before starting the bodywork, you need to have a chassis with the wheels, cylinders and motion bracket fitted at least. Alignment of the boiler and tanks depends on the chassis and cannot be done without it.

Unfortunately assembly starts with the worst part, the multi-level footplate/tank base. This needs a lot of care as other parts will depend on accuracy here. I wish I could have made it easier but could not find a way. When you are cursing at it, spare a thought for anyone attempting to build the Decauville version, as that has four footplate levels rather than the three here.

Tanks and footplate

Place the tank outers 1&2 on a flat board with the etched marks upwards. Lay the outer frames 3 on top so that the longest end half covers the etched lines and the top and bottom are the same distance in from the edges of the part underneath. Tack two of the vertical bars in place, lift the long edges up at an angle with a knife blade and bend to around 30° then solder the vertical bars fully. Repeat with parts 4,5 & 6, except that the inner frames are flush with the ends of the sides. Make sure that you end up with a handed pair. The ends of the tank outers need to be curved around a 3mm rod to match the shape of the footplate with an overhang of about 0.5mm.

The footplate 7 needs to be curved and folded to match the lower edge of the tanks. The first curve is 43mm from the front and needs a 6mm bar to form the curve. The second is 6mm further on, use a 3mm rod for this one. The fold line should exactly line up with the end of the inner frame. When all is okay, fold 90° at the etched line and reinforce the fold with solder. Make the last curve with the 6mm bar. Some tweaking will be required to make a good fit but do not solder in place yet. If you have problems with this bit, the other option is to break off the front parts at the fold line and use the optional footplate sections 8, which can be shaped and fitted independently. The remains of the fold line after snapping must be filed off to retain the heights and part 8 is longer, requiring trimming in the cab after fitting.

Try the cab inner supports 10 for fit in their slots. They should follow the curve of the footplate exactly. Tweak the footplate to suit if required. Solder in place with the upright part following the edge of the footplate. Trim the top part to footplate level where they extend above but do not remove the tags that extend below the floor level. File off the outer half of the footplate slots that protrude sideways. Fold the 2 flaps in the centre cut out upwards, but before folding completely flat, kink them slightly upwards and only solder the part that lays flat. Open out the hole to take a 10BA screw supplied and solder a nut over the hole.

Test fit a side, fitting the tank base onto the edge of the inner frame that runs along its lower edge. If all lines up, tack the two parts together at the middle level, ensuring that the side is vertical to the base. Tack the front section in a couple of places, line up the lower edge of the cab side with the underside of the footplate and tack that too. The most likely problem to crop up is that the base doesn't quite reach the front end of the tank. The easiest solution to this is to slightly flatten the two centre curves which will make the base slightly longer. If the gap is small it can be filled with solder, if too large, the tank front curve can be reshaped to fit. If the tank edge is proud of the base, gently press the angled inner frame closer to the side and it should fit better.

Tack the inner side in place in a similar manner, making sure that the rear edges of the inner frames line up. There might be a small gap at the front but this is unimportant and will be hidden later. Drop in the tank top 9 ensuring that the part number faces down, line up the rear edge with the tank inner and tack in place.

Repeat all this with the other tank. Inspect everything built so far, checking that the tanks stand vertical and that they are square when viewed from the ends. Make any adjustments necessary with gentle finger pressure then solder all joints solid. Filling the tanks with lead is a good idea and must be done before fitting the cab front. Wash the assembly thoroughly before doing this and do not put lead in the front half as this will make the loco front heavy after the castings are fitted. Trim any excess tank front flush with the tank inner sides.

Fit the cab valences 11 in place but do not try to fill the gap between valance and cab lower as this is visible on the real thing. File off excess tags that show below the valance and check that the valance does not overlap onto the recess at the cab floor rear corners. Trim with a file if required.

Cab

Solder the window rims 15 in place over the openings in the cab front 12 and rear 14 (2 options), then push out the rivets on both. On the rear, score a line between the waist height rivet rows, 3 passes with a knife tip is enough. This line wasn't etched in as it is too narrow and would seriously weaken the cab rear. Try the front for fit; it should sit on top of the square bend in the footplate, against the back of the tank inner sides and the side edges should touch the cab sides. If the tank inner frames are preventing a good fit, the inside ones can be filed easily but the outside ones are best prised away from their solder joint with a flat knife and folded in until they are no longer a problem. When happy with the fit, tack it once each side to the tank inner sides.

The temporary tank brace 50 needs to be soldered under the tanks about 15mm from the front. Place the assembly upside down with the tanks flat on a block of wood or overhanging a table edge and solder to one side first, carefully line up the tanks in all directions and solder so that the gap between the tanks is 23.5mm all along their length. The best way to get the gap right is to cut a piece of card or plastic card 23.5mm square and use this between the tanks to hold them at the correct distance while soldering. Do not file the tank brace in any way other than to remove tags as it is used later to set up the tank/boiler height

Punch out the rivets on the cab upper sides/roof 13 and anneal it by heating with a blow torch or over a gas ring until it goes a silvery colour, not cherry red. The curves at the roof eaves can be formed over a 3mm rod and must be kept between the etched line and the top of the side opening. The main roof curve can be formed with gentle finger pressure. Try it for fit, the curves should match the cab front and the lower edges should sit on the cab lower sides. If large discrepancies are seen, check the height of the cab front by comparing with the cab rear and adjust the fit of the cab front to suit. If the problem is the eaves curves, a little filing to ease the top corners of the cab front will never be noticed by anyone. When it all fits, solder the cab front to the inner and outer tank sides, solder the cab upper to the lower on one side, ensuring that the front edge lines up with the front. Solder the other side and check from all angles that everything is square. When happy, solder the roof/sides to the cab front.

An alternative method is to form the roof/sides to fit with the cab front removed, solder the sides in place and fit the front afterwards. The sides probably will not line up with the front by doing it this way, so after fitting the front, the position of the sides will need to be adjusted.

Solder 0.5mm wire into the 2 etched lines on the roof and file the ends flush and the top of the wires flat. Measure the roof and mark a centre line fore and aft and side to side in pencil. From where they cross, measure and mark a line 14mm along each line. Push out the rivets in the hose brackets 35, bend to 90° and solder to the roof centrally in each direction, with the outer face on the four crossing lines. A hose is not included as I haven't found a way of making one. If I find a solution later, I will make them available.

Buffer beams and well tank

The height of the buffer beam cut outs are not set to suit any particular coupling, they are taken from the real thing, although they suit the chopper couplings I use quite well. If using Kadees, the rear one will have to go flat under the cab floor and the support 48 cut in half and the halves fitted outside the frames. Modifications to the buffer beams are best done when they are assembled but not actually fitted. Some of the rivets on the buffer beams are larger than normal; to make these come out correctly, use a blunt punch with the work piece on an off cut of lead.

Trim 1.5mm off one of the long sides of the buffer beam support 48, bend to double thickness with the etched line on the outside of the bend and solder it centrally under the cab floor, flush with the rear edge. Punch out the rivets in the rear buffer beam 20 and solder it to the plain one, cleaning up the tabs after soldering. It fits centrally on the back edge of the floor and support with its top edge flush with the floor. Ensure that it is vertical. Similarly assemble the front buffer beam 19 with the riveted layer outermost and the one with etched lines innermost. Do not fit it yet.

Choose the well tank top 17 or 18 for your gauge, punch out the rivets and fold it to shape. Do the bends furthest the centre 45° upwards and then form the innermost bends 180° downwards. Carefully manipulate the 45° bends to 90°, trying not to spoil the rivets too much. Try it for fit on the chassis by sliding it under the lifting mechanism bar. If it is too loose or tight, ease the folds until it is a snug fit and stays in place of its own accord. An alternative method is to fold it first and do the rivets afterwards which makes the folding easy but the riveting difficult, your choice.

With the tank top in place, try the front buffer beam for fit. Its top edge should be flush with the tank top and the frames should fit in the slots at the back, ease them a little with files if required and solder the buffer beam only in place. The tank top is best left loose, otherwise removal of the motion bracket becomes impossible. The tank top will stay in place without soldering, held by its side strips and the front retaining screw, but the rear springs must be removable. Assemble the layers of springs 39. Looking at them as they are on the etch, the top half etched ones face outside, the top solid ones face inwards and the centre ones with the extra tags under their legs go in the centre. Handle them with care as they are delicate until soldered into one piece. Ease the slots in the tank top and try them for fit. When all is okay, solder the front ones in place and glue the rears after final assembly and painting, when the tank top doesn't have to be removed again.

Fold the edge strips on one of the cab rears 14 to 90° and reinforce with solder. Check the fit of the cab rear, it sits on the rear buffer beam flush with the rear edge and the side strips fit into the half-etched cut outs under the roof eaves. Do not fit it permanently until all work and painting is finished. Since it clips quite nicely in place, it is feasible to make up both cab rears and interchange them at will. If the rear will not fit without forcing the floor out of line, check the curve of the roof matches the curve of the top edge of the rear and adjust if required. If it is still tight, gently file the bottom edge until it is a push fit without causing distortion.

Boiler and smokebox

Before starting on the boiler 23, cut out the two sections marked on the sketch to allow clearance for the motor. This can be done with scissors and is easy to do while the boiler is still un-soldered. Anneal and carefully roll the boiler around a 15 or 16mm bar (a fax paper tube is about the right size) whilst trying to avoid creasing it where the top holes are. The firebox side with the holes should be on the right. Roll the edges of the boiler part first, getting the curve as tight as you can, then roll the boiler and firebox top. Do not roll the sides of the firebox part. Check for shape using the smokebox ring 26 and the firebox backhead inner 25, not the outer 24 as it's smaller. When the shape is correct, tack solder the seam in three places, stand the boiler on it's smokebox on a flat surface, drop the ring in and push it

down to the bottom, flux the ring next to the seam and apply solder to the outside, watching until the solder flashes onto the ring. Finish soldering the ring from the outside.

Check that the firebox is the same shape as part 25 and that both sides are exactly the same length. Hold the backhead in place and tack it in a couple of places, inspect and adjust as necessary then solder all round. Fold the 2 tabs on the bottom edges of the firebox inwards and reinforce with solder. Try sliding the boiler into place, engaging the boiler tabs under the ones on the footplate. Slight tweaking or trimming may be required to get a good fit. Clean up both ends of the boiler by rubbing on abrasive paper. Open up the four holes in the firebox side to clear 0.5mm. Locate the reverser parts 41 and assemble according to the sketch, using the same method as the expansion links by pinning it to a board. Trim the wires on the outside (R/H) almost flush but leave the inside ones about 2mm long. Plug it into the holes in the side of the firebox and solder the wires on the inside. While working in this area, cutting the corners off the footplate/boiler holders is a good idea as they tend to snag the motor wires when fitting the chassis (see sketch).

Curve the smokebox support plates 22 to match the boiler, noting which way they go round. Solder both together under the boiler, lining up the holes with the one in the boiler and ensuring that they fit with no gaps. Fold the smokebox saddle 21 to shape noting how the half-etched sections overlap and solder together. Fit the chassis to the body assembly with the rear screw, fit the well tank top and hold the tanks down so that the temporary brace sits squarely on the well tank top. Check that the chassis is square under the body and that nothing is leaning sideways. Check that the tanks are not running up or downhill and correct by gently filing or packing the brace if they are. Fit the boiler from the rear and slip the smokebox saddle under the front plates with its joint to the rear. Again look at it from all angles checking that the tanks etc are still square and that the boiler is sitting level. It is most likely to be a fraction high at the front, so gently rub the smokebox saddle bottom edge on some wet and dry until the correct height is achieved. Check that the smokebox base 49 fits into the bottom of the smokebox base, again noting which way round it goes, and solder in place. Put back in place under the boiler.

Make sure that the holes in the boiler, saddle base, well tank top and chassis will all clear a 10BA screw and that they line up. Use a broach or needle file to ease them if required. Fold the nut plate 51 double and solder together. Open the hole to clear 10BA and solder a nut over the hole in the side with the longest plate. Push a screw through the chassis, tank top, and smokebox from below and screw into the nut and plate held in the smokebox, which should have its longer length running from side to side. Gently tighten both screws and check that nothing distorts or goes out of line as you do. If there are any problems, find them now as they cannot be fixed later. Also check that the well tank top is hard against the back of the buffer beam and the smokebox saddle is square and central on top of it. When everything lines up, solder the nut plate into the boiler. Do it quickly with a hot iron so as not to un-solder the nut. The saddle needs to be soldered to either the boiler or the well tank, your choice, but the well tank is a lot easier. Solder the front only and do the back and/or sides next time it is all dismantled.

Finally, while everything is assembled, the tank brackets 27 and rivet strips 28 need to be fitted. Cut some strips of thin card such as a cereal packet and wedge equal amounts each side between the boiler and tanks to stop things moving. Wrap an elastic band around the whole assembly to keep the tank brace pressed onto the well tank with any packing found necessary earlier. Stand the body on end and try the brackets for fit, the outside edge and rows of rivets should run vertical. A small notch will be required to clear the plates under the smokebox. When happy with the fit, solder both in place. File the tops of the plates flush with the tank tops. The rivet strips need to be pre-curved then positioned and soldered to the bracket and smokebox. Trim them to length so that they fit between the plates under the smokebox and the top of the brackets just fitted.

If you intend to use the flat smokebox door, push out the rivets on 29 and solder it to 30, lining up the holes as you go. Bear in mind that some examples with this door only had 4 rivets, the two on the horizontal axis seem to be optional (check photos). File the back smooth and round off the front edge with a file as the real thing has a rounded edge. There are two types of smokebox hinge 31 but assembly is the same for both. Lay the back part flat with a piece of 0.5mm wire in its grooves, lay the top part on this, line it all up and solder the ends. Cut the wire almost flush at both ends and remove the half-etched joiner between the hinge parts. Round off the vertical edges of the hinges with files. Push out the rivets (strap type only) and remove all other half-etched tags. Position the hinge with the wire about 1mm away from the edge of the door and with the straps equidistance above and below the centre line. Solder in place then gently bend the hinge so that it lays flat when tried in place on the smokebox. The door can be glued or soldered in place as you prefer. Solder a piece of 0.5mm wire in the hole on the left. Make a handle about 4mm long by bending the same wire around another piece of wire, fit pointing downwards and finish with one of the four spoked hand wheels 42.

Bits and bobs

Clean up the tank supports 32 and backs 45 and push out the rivets in the backs only. File off the tags on the short side of the brackets and fold the strips, two the right way and two the wrong way then solder them back to back in pairs. Clean up the edges then position them centrally on the backing pieces and solder in place. The completed brackets fit under the tanks, butting against the end of the rivet strip on the well tank. Due to model wheels being a tad over scale, the bottom edge of the bracket will need trimming slightly to clear the rear wheels. Since these are not compensated only a small clearance is required. In 16.5 only, trim the outer ends of the brackets a little so that they don't quite come to the outside face of the tanks. When happy with the fit, solder to the tank underside only.

Locate the derailment beams, not numbered on the etch but found below the cab rears, clean them up, score the long fold lines and bend to 90°. Break off the two legs on each beam and solder on the inside of the edge they came from spaced 16mm apart centre to centre. The beams fit under the buffer beams with the legs soldered to the back, the horizontal part of the beams pointing towards the centre of the loco. The gap between the top edge of the beam and the bottom of the buffer beam is best at around 1mm at the front and 1.5mm at the rear. They should be around 1mm closer to the rails, but with such a short wheelbase it is safer to have them higher.

Fit just the tank top to the chassis with a screw and nut, rivet and fold the footplate supports 52 and locate them under the triangular side extensions of the well tank top. They fit central with the plain side at the top. Make sure that the tank top is exactly flush and tack the brackets to the back of the buffer beam. Mark a line across the width of the tank top 2.5mm back from its front edge. Fold the inner jack brackets 43 and place them with their centre on this line and the outer face 9mm from the end of the buffer beam. Solder them in this position. Rivet and fold the outer jack supports 44 and tack to the back of the buffer beam with the hole at the same height as the inner bracket and a gap wide enough to take a jack, typically 8 to 8.5mm. The jacks and brackets were removed on most locos after their war service. Check photos and only fit them if you want to. Remove the tank top and solder the brackets fully.

Rivet, fold and fit the whistle bracket 36 into its recess on the cab front. The horizontal part goes at the bottom.

Cab interior

The bunkers managed to get omitted from the body etch and had to be added to the chassis sheet so are nickel silver. Anneal the bunker side and curve the door end around a 3mm bar so that when fitted, the bunker is about 1mm in from the edge of the cab doorway. Cut the bottom front corner as it will interfere with the rear brakes otherwise. Curve the rivet strips to fit around the top edge and solder in place. Try the bunkers for fit, ensuring that they are parallel to the cab side, adjusting as required, there must be at least a 2mm gap between each bunker and the side of the firebox. When happy, solder to the cab side at the rear and one tack at the front where the bunker plate is visible underneath.

Clean up the backhead 24, push out the rivets and round off the edges on the riveted side with files. This will be the side that shows and all parts will be fitted on this side. Lay the backhead flat and drill through the top hole 0.7mm and put a short length of wire in the hole. Put the regulator backs 40 on the wire, solid one first with the large part at the top. Line them up and solder in place. The regulator lever 37 is the one with the larger hole at one end. Solder a short length of 0.5mm wire into the small hole and fit onto the mount angled to the right. File the wire at the front to about 0.5mm but leave the wire at the back. Solder 1.0mm wire into the four holes under the regulator filing the back flush and leaving about 0.5mm at the front. Locate the firedoor 33 and levers 37, fold the top and bottom strips double with the etched line on the outside of the fold, solder to the backhead and use this as a working base. Use 0.4mm wire and for the two wires in the holes in the doors, make a square U shape and push it through from behind. Assemble the levers by following the sketch. Locate the shelf 34 and fold the edges towards the half-etched side to form a rim. Solder all round the edge and clean up. It fits in the slot above the firedoor with the flat side downwards.

Drill a 0.7mm hole each side just above the top rail of the firedoor, 2mm in from each side. Locate the gauge glass castings and carefully drill 0.5 in the four drill starts, one in the bottom and three in the side. Bend three short L pieces in 0.5 wire and fit in the side holes pointing downwards. Cut the top leg to about 1.5mm and fit to the backhead noting that they are handed, the levers should be on the outside. Fit 0.5 wires in the bottom holes as in the sketch and run it down to floor level to represent drain pipes. File off all protrusions from the back of the backhead except the regulator wire. Open out the regulator hole in the back of the boiler so that this wire will fit in it.

Locate the steam fountain casting which will fit in the hole on top of the firebox. Drill 0.5mm in the two drill starts in one side and 1.0mm in the two ends. Fit short lengths of 0.5mm wire into the side holes and fit the two small hand wheels 42 to these. Fit 1.0mm copper wire in the end holes and shape it to follow the sketch. Fit a piece of 0.5 copper wire down through the whistle bracket and the hole in the cab front to end up behind the steam fountain where it can't be seen. The whistle will fit on the wire where it protrudes out of the bracket but don't fit it until after painting. A small notch will need to be filed in the roof edge to clear the whistle. The steam fountain and the backhead can be fitted after painting with a spot of superglue to hold them in place. Fit 0.5mm copper wire into the hole in the pressure gauge and shape it according to the sketch so that it also finishes behind the steam fountain. This can be glued in place after painting. The handbrake casting fits against the L/H bunker with its top bracket just above the bunker top, this is best fitted after the backhead. Make sure that it is angled so that the shaft lines up with the mechanism on the chassis. The bunkers quite probably had wooden lids originally, since if they didn't, the drivers would have soon made something to do the job. Nothing is included as I have no evidence of this.

Finishing

The rest of the castings can be fitted in any order you like. Make sure that boiler fittings sit straight and level. The best way to ensure that the chimney base is upright is to position it with the straight chimney loosely fitted. This gives more to hold on to and more to see when lining things up by eye. To solder these in place, tin the area that they will go with normal solder then tin the base of the item to be fitted with 90° solder. Put it in position, flux and

apply heat just to one side of the item. When the solder melts, the item will sit down on the boiler and can be moved with a pointed item to reposition it if required. If when examined later it is not quite right, just re-flux and re-heat and adjust it again. Do not apply the iron directly to any casting as even a low temperature iron will get hot enough to melt whitemetal. After fitting the castings you will find that weight is needed in the firebox as the loco becomes front heavy. Add sheet lead to the sides but not the top or rear, as this will foul the motor during chassis removal. A whitemetal driver will also help.

Open out the holes in the sand dome to take the lever 37 and pipes, and fit them after the dome. The levers go on the left and use the 0.6mm coiled wire is used for the pipes. The sanding rod 38 can be fitted now or after painting. There are two chimneys which use the same base. The spark arrester is original equipment and the stove pipe is a typical later replacement, your choice. The jacks were supposed to be fitted by bending the outer bracket and fitting between the holes. A better way is to cut off the pegs on the ends of the jacks and glue them to the footplate between the jack brackets. If the lack of pegs offends you, you can solder short pieces of 0.5mm wire into the bracket holes to represent the pegs before fitting the jacks.

Boiler bands can be represented by tape of some type; I usually use 'sellotape' of no particular brand. Stick a piece about 50mm long on a clean flat surface and cut strips 1.5mm wide with a ruler and a sharp craft knife. Stick them in place just before painting and the paint will hold them in place before they have a chance to peel off. If you want lined boiler bands, use transfer paper. Paint with the body colour, line them in your usual manner then cut them out with a knife and ruler as above, once fitted the varnish will hold them in place.

Name plates 47 are supplied for anyone building the West Lancashire Ry. No 2405 and two pairs of works plates 46 numbered 2010 and 2014, but as the numbers are way too small for the etching process, only the writing is legible, so either pair can be used for any loco. Position them as shown in the drawing after painting but before varnishing.

Designed and produced by Mark Clark - Locos n Stuff

Website – www.locosnstuff.co.uk

Enquiries, technical help – borsig1958@gmail.com or 01634 575081 before 8pm
12 Adelaide Road, Gillingham, Kent, ME7 4NJ

Parts List

1	R/H Tank outer side	37	Firedoor levers, sandbox arm and regulator (5 parts)
2	L/H Tank outer side	38	Sanding rod
3	Tank outer frame x2	39	Spring parts
4	Tank inner side	40	Regulator mount x2 (in holes in backheads)
5	Tank inner side	41	Reverser (8 parts)
6	Tank inner frame x2	42	Cab hand wheels (4 parts)
7	Footplate	43	Jack bracket inner x2 (in cab rear)
8	Optional footplate sections x2	44	Jack bracket outer x2 (in cab rear)
9	Tank tops x2	45	Tank support backs x2 (in cab rear)
10	Cab inner supports x2	46	Works plates x4
11	Cab valence x2	47	Name plates x2
12	Cab front	48	Buffer beam support
13	Cab upper sides and roof	49	Smokebox base
14	Cab rear, 2 options	50	Temporary tank brace
15	Window rims x6 (in tank frames)	51	Nut plate
16	Not used	52	Footplate support x2
17	Well tank top, 14mm gauge	-	Derailment beams (below cab rears)
18	Well tank top, 16.5mm gauge	-	Bunker x2 (on N/S fret)
19	Front buffer beam x4	-	Coal door x2 (on N/S fret)
20	Rear buffer beam x2	-	Rivet strip x2 (on N/S fret)
21	Smokebox saddle	wm	Chimney base
22	Smokebox support plates x2	wm	Stovepipe chimney
23	Boiler	wm	Spark arrestor (2 parts)
24	Firebox backhead outer	wm	Smokebox door
25	Firebox backhead inner	wm	Steam dome
26	Smokebox ring	wm	Sand box
27	Tank bracket x2 (handed)	wm	Water fillers x2
28	Rivet strip x2	wm	Re-railing jacks x2
29	Smokebox door outer	wm	Brake mechanism
30	Smokebox door inner	wm	Steam fountain
31	Smokebox door hinge (2 types)	wm	Pressure gauge
32	Tank support brackets (2 pairs)	wm	Cylinder top covers x2
33	Firebox door	brass	Safety valves x2 (cast)
34	Firebox shelf	brass	Handbrake standard (cast)
35	Roof hose brackets x4	brass	Water gauges x2 (cast)
36	Whistle bracket	brass	Whistle (turned)

Also in the box

Brass body etch		1
NS chassis etch		1
0.4mm brass wire - straight		50mm
0.5mm copper wire - coiled		100mm
0.5mm brass wire - straight		250mm
0.6mm brass wire - coiled		200mm
0.7mm NS wire - straight		50mm
1.0mm copper wire - coiled		100mm
1.0mm brass rod		50mm
1.4mm brass rod		100mm
1.5/1.0mm brass tube		60mm
2.0/1.5mm brass tube		25mm
2.0/1.5mm brass tube		2 x 1.5mm
3.0/2.0mm brass tube		2 x 1.5mm
10BA PH screw		2 x ½''
14BA CS screw		2 x ¼''
10BA nut		2
14BA nut		2
6 x 1/8'' axle bushes	- OR -	2 x 1/8'' axle bushes & 4 x hornblocks
CD of pictures and instructions		1
PCB		30mm
0.3mm PB wire		150mm
Insulated wire		200mm
0.6mm pins		12
0.5mm pins		8

Locos n Stuff
Industrial and Narrow Gauge
• by Mark Clark •
borsig1958@gmail.com
01634 575081 before 8pm

Kerr Stuart Joffre chassis assembly

This chassis kit is part of a full kit for a Kerr Stuart Joffre 0-6-0T, slightly modified to give more installation options. It can be built to 14mm or 16.5mm gauge but is supplied with axles for 16.5mm only. Axles for 14mm are available separately. In the full loco kit the chassis comes complete but when sold separately, the motor, gears and wheels are optional.

The wheels should be 14mm (2'), 7 spoke with the crankpin between the spokes, the centre pair being flangeless. These are only available from me as I had them specially made by Slaters, the closest otherwise is 10 spoke with the pin in line with a spoke, available from Alan Gibson and Romford. Note that the earlier coarse scale Romfords are not suitable as the flanges are far too deep, although they can be turned down in a minidrill with files if you are careful.

The gearbox is a High Level Slimliner + with drive extender and was chosen to hide itself and the motor in the firebox and boiler. It is 54:1 reduction in 2 stages plus a 2 stage extender. The 10/24 motor might look small, but with its skew wound armature and rare earth magnets is more powerful than the 12/24, which would have been my choice otherwise. Being only 10mm wide, it is also a lot easier to get in the boiler and leaves more room for weight. High Level's own instructions are included for assembly of the gearbox.

Before starting assembly, a few decisions have to be made.

- Decide what gauge to build and use the marked parts for 14 or 16.5mm. For other gauges, the spacers etc will need modifying and/or shims added before fitting the wheels.

- The chassis was designed for a lowered cab. If you are building it to fit something other than a Joffre and want parallel frames, solder the optional frame sections in place and fit the rear spacer in the higher slots.

- Decide if you are building a rigid or compensated chassis. If compensated, you will need to cut out the sections that the bearings fit in for the front two axles to fit the horn blocks, which are supplied on request. Cut up the centre of the etched rectangle through the axle hole with a fine saw and snap off the two halves by bending back and forth. Clean off the remains of the half-etching with files.

- Later you must decide how far to go with the valve gear. Parts are included to make a full set of rods and levers with forked joints, but by leaving off 1 layer of each, a more simple overlapped assembly can be built, which might be easier for novices.

- Power pick up is a matter of personal preference but I have included a length of PCB, some phosphor bronze wire and insulated cable to make wiper pick-ups. Stick a 6mm length of PCB to the frames between the rear and centre wheels and another in front of the leading wheels. Use a two-part resin adhesive as superglue regularly fails here. Make gentle bends in the phosphor bronze wire as sharp bends tend to snap easily. This is best done after the brake gear is fitted as you will have to avoid the pull rods. To use plunger pick-ups, follow the maker's instructions and use very light wire to connect them up

Assembly instructions

General

These instructions assume that you are building this chassis as part of the full Joffre kit. Those who are not can make as many changes as they like, but sticking to the assembly order would probably be a good idea. Etched lines are on the inside of the folds which are to 90° unless stated otherwise in the instructions. As parts are removed from the fret, clean up the edges with files but only enough to remove the joining tabs. Excessive filing will be detrimental to the fit and is not necessary. A smooth finish is only required on parts where an edge is visible. With layered parts, solder them together first and clean up the edges afterwards. This will give a better finish, will hide the joints and make them easier to hold during filing. Open out holes with drills or broaches to fit the wire or bushes that are to go in them.

Some parts are best assembled on wires inserted in holes drilled in a small piece of board of some kind. An off cut of melamine shelving or MDF is most suitable but wood can be used, although you have to watch out for drills wandering in the grain. As you proceed with building, refer to the drawing, sketches and pictures for clarification of awkward parts.

Mainframes

Start with the frames 1 & 2. Open out the compensation beam holes between the front two axles to 1.4mm whether you are compensating or not. For a rigid chassis, fit the bearings with the flanges facing outwards. It may be advisable to file the centre holes about 0.5mm upwards to raise the centre axle slightly. This avoids the problem of the chassis rocking on the centre axle on uneven track.

Fold up the spacers 3 & 4 and fit 3 to one frame and 4 to the other. Spacer 3 has its hole in the horizontal section and it will help to remove the etch cusp from the cut out in the frame top so it ends up flush with the top edge. Spacer 4 can go either way round depending on where the hole suits you best, but when building a Joffre the hole must go at the front. If you are building a level topped chassis, the false top sections must be added by butt soldering to the main frames and spacer 4 can be fitted in the top or bottom slots as you see fit. Fill in the unused slots with solder if you wish.Solder the two frames together with a couple of tacks on each spacer, ensuring that the assembly is square and flat. If it doesn't come out perfect, dismantle it and correct it now, as it will just cause problems later if you don't. When satisfied, finish soldering all joints and, if not compensating, solder a length of 1.4mm rod through the beam pivot holes as a stiffener and file the ends flush.

If compensating, skip to the section on assembling the coupling rods as these will be needed to fit the hornblocks. Fit bearings to the rear holes and hornblocks to the other four using hornblock jigs and the manufacturer's instructions.

Solder 0.5mm wire through the front brake hanger holes and leave about 5mm protruding each side. The rear brake hangers will need short L sections soldered inside the frames, also with 5mm outside. If compensating, cut a piece of 1.5mm ID tube to fit loosely between the frames and countersink the pivot holes on the outer face of the frames with a large drill held in just fingers. Pass the 1.4mm rod through the holes and tube and put a tiny amount of oil or graphite paste between the frames and tube then solder in the countersinks on the outside. Cut off excess rod and file flush to the outer faces of the frames. Check that the tube rotates freely.

Solder a length of the 1.4mm rod on the top of the tube ensuring that it is central and extends past the front and centre axles. It is easiest to do this from underneath then rotate the beam so that it is above the axles.

Wheels, motor and gears

It is assumed that the Slaters wheels, High Level gearbox and Mashima motor supplied with the kit will be used so the instructions will only cover those items. If you choose to use other parts, fit your choice of wheels, gearbox and motor according to the maker's instructions.

Slaters wheels are self quartering and all are insulated. Before fitting the crankpin screws, countersink the hole at the back of the wheel with a 2mm drill held in just fingers. Push the screw in from the rear, adding a spot of superglue to the last few threads and pull the screw into place, holding it for a few seconds until the glue takes. Assemble the wheels and axles with the R/H crankpins leading by one quarter turn. Side play, other than running clearance of 0.3mm or so, is not required with flangeless centre wheels but allow extra side play on the centre and rear axles if using all flanged wheels. The thicker shims can be used on the front two axles and a gentle filing of the bush face and no shims for the rear axle. The gearbox is mounted on the rear axle with the motor pointing up into the firebox or forwards in the boiler. In the Joffre, the gearbox extension leans backwards by about 30° with the rest of the gearbox vertical and the motor horizontal in the boiler (see sketch). The two gearbox parts need to be either soldered or glued together but be careful not to glue up or melt the gears. Leave the final drive gear loose until the valve gear is finished. High Level's own instructions are included for assembly of both gearbox sections.

If at any time you find that a tyre has come loose on a wheel, a small amount of superglue on the back where the tyre meets the centre will cure it. Be sure to clean any glue off the back of the tyre or it will interfere with the pickups.

When the chassis is placed on its wheels on a piece of track, the front 2 axles will push against the rod while the rear is held in bearings. Measure the height of the frames from the rail in several places. If one end of the chassis sits higher than the other, it can be corrected by gently bending the rod between two pairs of pliers. It may be easier to remove one wheelset to do this. Note that although this normally works on a flat board, it won't if you are using the correct flangeless centre wheels; it must be done on a piece of track to keep the wheels at the right level.

Coupling Rods

Parts 30, 31 & 32 are laid out on the fret in the order they fit together in left and right handed sets. Cut them out carefully and lay them out as they came from the fret to avoid confusion. Assemble all 3 layers of each rod onto an oiled broach or a drill bit, check that they are in line and solder together. When all 4 rods are soldered, clean up the outer edges and open out the crankpin holes to suit your crankpin size. For the Slaters wheels this will be 1.9mm which is larger than I expected when designing the kit and doesn't leave a lot of metal around the hole. Use drills of progressive sizes and finish carefully with broaches to achieve a running fit. Open out the gradient pin holes to suit the pins supplied. The rods are identical back and front until the gradient pins are fitted, so make sure that you end up with a handed pair with the pin heads on the outside. If the rods are stiff, use wet 'n' dry to ease the gap and check that the square ends of the front rod layers are clearing the rear. Adjust with files until a free fit is achieved.

Reduce the heads of two 0.6mm pins in a minidrill to around 1mm, countersink the rear holes by using a larger drill held in just fingers, fit the pins ensuring that you have one from each side, lightly oil the joint and solder from the back. Check that the joint is good and that it still pivots then trim the pins almost flush at the rear.
Open out the crankpin holes progressively with drills or broaches to 1.5mm and try the rods for fit one side at a time, opening the holes slightly further with a broach until the chassis pushes along freely. Repeat with the other side then try both together. If generally a bit stiff or with what seems like several tight spots, gently open out all the holes a little and they should vanish.

The front crankpin bush needs to be recessed, so file the face of the rod enough to allow the bush flange to be flush with the rest of the rod. The bushes on the front crankpins will need reducing in length to eliminate slop, so fit the bushes from the rear of the rod and file the exposed shank until it is almost flush with the rod. If you are unsure how far to go, try repeated trial fitting to check how much play is left and try to get it down to less than 0.5mm, less than 0.25mm would be better as clearance is tight behind the crossheads. Assemble with 1mm/14BA washers against the wheels and gently tighten the bushes using flat pliers. On final assembly, add a spot of superglue to the outside of the bush to stop it coming loose. The screws of the front two axles need trimming flush with the bush. This is best done with a slitting disc as they are stainless steel. You could cut them with cutters, but cleaning up after must be done with a diamond file. Leave the rear ones full length for now.

Cylinders

At no point should the cylinders be soldered to the frames. They are removable and held in place by a screw.

Cut 2 x 12.5mm lengths of 1.5mm OD tube and open out the larger holes in the cylinder front 5 and cylinder rear 6 to fit. Slot parts 5 and 6 into place, the slots should be tight but can be eased by sliding a piece of waste etch in and out a few times. Check that they are square to the frames and bend the top strips on 5 down at an angle until they are flush with the top edge of 6. A little filing will be required so that they are not proud of the top edge of 6. Solder the top strips to part 6, insert the tubes with the front end flush with part 5 and solder in place. Bend the front tab of 5 down 90° and fold part 7 with the etch line on the outside, it came out slightly too wide but will fit with careful bending. Part 7 fits on top of the front tab of part 5, flush with the frame ends. Solder to the frames, not to part 5. Ease the holes in parts 7 and 5 until a 10BA screw will fit through, coat the faces of 7 and 5 where they touch with graphite paste, oil the screw and fit together with the nut on top. Solder the nut to 7, dismantle and reinforce any joints that need it. If the nut is proud of the frame ends, file it back a little and it may help assembly later to reduce the diameter of the screw head in a minidrill with files.

Open out the holes in the rear cylinder covers 9 to fit over the 1.5mm OD tube and punch out the bolt heads on the cylinder covers 8 & 9. Solder the cylinder centre caps 10 onto the front covers 8. Solder all four covers in place, aligning them with a bolt head at the top and bottom centres. Pre-shape the cylinder wrappers 11 to match the outline of the cylinder assembly by rolling them around a 7mm bar; I used the handle of a screwdriver. The top angled edge needs to match the cylinder shape exactly. Solder them in place when happy with the fit.

Valve guides

Clean up parts 12, 13 and 14 and open out the larger holes to take 1.5mm OD tube and the smallest holes to take 0.4mm wire. The centre holes in part 14 need to clear 0.7mm. Open out the top holes in the cylinder assembly rear to 0.4mm and 0.7mm.

Lay a part 12 on your drilling board and drill 0.4mm through both small holes into the board. Put short lengths of 0.4mm wire in these holes. Fold part 12 to 90° at the line nearest the holes by holding with pliers covering the three holes and fold by pushing against a hard surface. When folded push it onto the two wires. Fit a 1.5mm length of 1.5mm OD tube into the hole in part 12. Place a part 13 onto the wires and tube, push down and place a part 14 on the wires only and solder everything together, preferably with a high temperature solder. Cut the wires above part 14 back to about 0.5mm to represent the bolts but leave the other ends as they will locate this assembly onto the cylinders. Clean up the outer edges of parts 12 and 13 where they are soldered together as this is meant to look like one piece.

Lay the long length of 1.5mm tube onto part 12 so that it lines up with the hole through the assembly just made and reaches the remaining etched line. Solder the tube in place then cut through the tube and part 12 leaving 1.5mm remaining. You can do this by eye or put a piece of oiled 0.7mm wire through to help line things up. Repeat this procedure to make a second assembly. Fit them both into the holes in the cylinder rear and solder them both in place, preferably with a lower temperature solder, ensuring that they are square to the cylinders and horizontal. Clear the hole so that 0.7mm wire will fit through easily. Trim the top wires inside the cylinders so that they will not foul the top when fitted later.

If you only have one grade of solder you must attach them to the cylinders quickly, so as not to unsolder all you have done. You could also consider bending the wires over inside the cylinders and using a two part epoxy adhesive but mind you don't block any holes.

Crossheads & slidebars

Solder the crossheads 16 and slidebars 17 together into pairs, the crossheads have the etched slots facing each other. Fold the crosshead tops 15 into a square U shape so that it will fit over the top strip of part 16, if you make this a tight fit the parts will stay firm while positioning and soldering. Line up the ends of both parts and the thick parts at the bottom of 15 should line up with the top strip of 16. Grip the pair firmly with pliers by part 15, check to make sure that all lines up and it looks square and solder the pair together. Check that the crosshead slides on the slidebar with ease and no tight spots. If it is sticky, this is normally due to misalignment of the slidebar halves, which is easily cured by gentle filing.

Gently drill 0.6mm into the piston rod holes in the crossheads, cut two 16mm lengths of 0.7mm NS wire and file one end of each until they are a tight fit in the crosshead. Solder them in place, ensuring that they run parallel to the slidebars.

Put the two 1.5mm lengths of the 1.5mm ID tube over the piston rod tubes and solder in place. Locate the two 1.5mm lengths of 3.2mm OD tube and solder a slidebar to the top of each one. They must be central, vertical and the bar must run horizontally. The best way is to grip the tube in a vice by its bottom third and position the bar on top by eye, soldering it when it looks right. Remove it from the vice and check the alignment. If the vertical alignment is out, it must go back in the vice for another try. If the horizontal alignment is wrong, the bar can be gently bent to correct it, unless it is a long way out, in which case it is best to try again. When all seems okay, try the tube part for fit on the piston gland, the tube will probably need easing with broaches or files to get a good fit. Be gentle so as not to break the solder joint.

Try the crosshead and slidebar together and adjust the fit until everything slides smoothly. If you have problems getting a smooth fit, try swapping parts or sides, as a different mix might work better. Although each side should be identical it is best to label them L and R and do not mix up the parts once you have it sorted.

Motion bracket

My original idea for fitting the motion brackets failed miserably so I came up with the method below. The problem is that the cylinders have to be fitted from below while the motion bracket must be fitted from above. This makes a one piece assembly almost impossible. You can, of course, solder the whole lot permanently in place, but I dislike doing that as it makes dismantling and repairs a long and tiresome job.

Clean up parts 18 and 19, and punch out the rivets on part 18. The first fold in the motion bracket is the one between the two holes with the etched line on the outside to 180°; all other folds are to 90° with the etched line on the inside. Make all the folds and check all the angles are correct and try part 19 for fit. The top edge may need filing slightly to get a square finish and the holes in 18 and 19 should line up. If they don't, check that part 18 is not twisted after it's folding and correct if required. Try it for fit on the frames using a piece of scrap etch to ease the frame slots and make any adjustments necessary so that it all sits square. Run solder into the folds and joints for strength and round off all corners and edges with files, as this is supposed to look like a one piece casting. Do not solder the motion brackets to the frames.

Valve gear - General

The valve gear is assembled using pins in 2 sizes, 0.5 and 0.6mm which are nickel plated steel, making them hard wearing but easy to solder. The heads need reducing in a minidrill with files, aim for around 1mm diameter with a flat head. The 0.5mm pins are tempered, which means that they are harder to cut and diamond files will be needed to reduce the heads and clean up after soldering. Insert the pins from the outside and apply a resin flux to the rear. If the joint is forked, oil it just before soldering, if a simple overlaid joint, graphite paste works better. Once soldered, cut off the excess pin and file almost flush. If it all goes horribly wrong, dismantle the joint, clean off the solder and try again with a new pin. Cut out parts 20, 22 to 29, 33 and 35 and keep them in sets on a piece of card with their part numbers, separating them into left and right sides would be a good idea as well.

Connecting rods

Locate the connecting rod parts 33 – 35 and make a joggle in the small end of each outer rod, such that when all three layers are together, the crosshead will fit in the gap. Line them up with an oiled broach through the big end holes and solder together. Clean up all the tags and try for fit on the crosshead. Final assembly will be with a 14BA screw with the nut on the outside, so open out the crosshead and small end holes to take the screw, and the big ends to fit the crankpin bushes. Fit the connecting rods with the screws fitted from the rear and use a thread lock of some kind to retain them, leaving enough play to move. Trim excess thread from the screw and file away as much of the screw heads as you can.

Expansion links and rods

Clean up parts 20, fold to a square U shape and fit with an oiled pin. Solder in place and remove the pins. Clean up the expansion links 22 and open out the holes, two to 0.5mm and two to 0.6mm to take pins, see sketches for which is which. Assemble with 0.5mm wires drilled into a board. The gap between the two parts should be 0.8mm, so put the first layer on the wires, fold a piece of scrap etch double and lay this on top followed by the second layer. Solder together while holding all in place with the tip of a knife, remove the scrap etch and file the wires almost flush. Check that it fits into the motion bracket using a 0.6 pin. If you have trouble with the wire pins catching on the motion bracket sides, check if the expansion link is twisted and correct if necessary. You can also file the wires flush if you don't mind them being missing.

Solder together the two pairs of fly cranks 28 and fly crank rods 29, clean up and open the holes to clear a 0.6mm pin. Reduce the heads of 2 pins in a minidrill and assemble the 2 sets of parts, noting which way round the parts go by reference to the drawing. Similarly attach these to the expansion links.

Combination lever

The valve rods 23 and union links 25 are assembled as plain rods. The combination levers 24 and lifting links 26 need a fork at both ends, so use a similar process to that used on the connecting rods. The fork at the top of part 24 must include both holes. One end of part 26 needs to accept a single thickness (0.4mm) while all the others are double (0.8mm). The rearmost 2mm of the valve rods may need thinning with files so that they will fit inside the expansion link. If any of the forks come out too tight to get the relevant rod in, the solution is to thin the end of the rod until it does fit. This is far easier than dismantling the forked rod and re-bending it.

Referring to the drawings, assemble the union link 25 and combination lever 24 for each side using the 0.5mm pins supplied. This assembly can be fitted to the crosshead with a 0.5mm pin after a small step outwards is bent into the lower anchor point on the crosshead. This is to give clearance for the crosshead and combination lever. The valve spindle is a 0.6mm pin with the head filed into a T shape. It is fitted by gently spreading the top fork of part 24 to ease the ends of the T into the two holes prior to fitting the 0.5mm pin for the valve rod 23.

Testing

Now is a good time for a dry run to check clearances. Fit the coupling rods and trim off excess crankpin on the front and middle axles as previously mentioned (see 'coupling rods'). A shim between coupling and connecting rod bosses may be needed. Put the cylinders in place, position a crosshead and slidebar in place with the attached valve gear roughly in position, fit a temporary pin to hold the valve rod in the motion bracket and turn the wheels a few times by hand to see where things clash. The most likely problem is the combination lever fouling the crosshead in the forward position. This can be cured by gentle adjustment of the angles of the various levers and twisting the slidebar a few degrees off vertical towards the chassis, but mind that the crosshead doesn't then foul the front crankpin. You can even bend a slight zigzag in the combination lever to help it clear the crosshead. Filing a slight taper on the leading edge of the crosshead slider and the back inner edge of the combination lever will also help, as it reduces the inclination to catch.

When the front halves of the valve gear functions properly, remove all except the motion brackets, check that they are level, square to the frames and pushed right down in their slots. Solder the brace 21 to the two tags joining them together. Be careful not to solder anything to the frames. If you need to make a better job of the joints, remove the assembly, grip a joint in pliers and re-solder it whilst it is held.

Reassemble and solder the end of the slidebar squarely under the small L piece below the motion bracket, ensuring that the slidebar front collars are pushed firmly onto the back of the cylinders. Test again for freeness in the motion and adjust if required by unsoldering the slidebar rear and turning it slightly whichever way is best to improve clearance and smoothness.

Fly cranks

Fit the expansion links in the motion brackets with the valve rods running through their centres, remove the nuts from the rear crankpins and fit the connecting rods and bushes, which will need shortening to suit. Check clearances, keeping the connecting rods as close to the centre crankpins as possible. The rods may need a small bend so that they don't foul on either the crankpins or the back of the expansion link. File any parts that catch as much as you dare until everything clears. Put a tiny spot of thread lock or superglue on the faces of the front and centre pairs of crankpin bushes to lock them in place. They will unscrew themselves sooner or later if you don't. The fly cranks must be soldered to the crankpin retaining bushes. This must only be done once you are sure that all is running well and that the wheels and gearbox will not have to be removed again. If you like to dismantle the chassis for painting, then this must be done first. Things can still be dismantled afterwards but it will be a major job.

Note - Before attempting to solder the fly crank in place, the end of the crankpin screw and face of the bush must be tinned. Carefully apply flux to these parts only and tin with high temperature solder. This is necessary because a last minute change in crankpins forced me to use stainless steel screws, which don't like lower temperature solders and refuse to take any solder by flowing through the fly crank hole from the outside. Once tinned, carry on as below.

Position the crankpin at the bottom position, place the fly crank over the pin and turn slightly to the rear by about 1.5mm. Solder in this position, ensuring that the crank is square relative to the face of the wheel and trim off excess crankpin, again with a slitting disc. Test again for clearances and correct anything that requires it. When all seems fine, replace the temporary pins through the motion bracket with proper reduced head ones cut to around 1mm too long. Fit the pins, oil the moving parts and superglue the pin at the back. This will make it a lot easier to remove in the future should problems occur.

Test the chassis under power but do not oil it first. Identify any tight parts and clearance problems and rectify by gentle bending of rods or filing of pins. Beware of the motor overheating at this stage; do this in short gentle sessions until problems are eliminated. Once everything seems okay, fit pickups using the PCB and phosphor bronze wire supplied, oil everything and see how it goes. If you have a rolling road, consider using Brasso on all the bearings and pivots to speed up bedding in, but be sure to clean it all off afterwards and replace with oil or it will continue wearing away. I find this works for me but a lot of people don't like the idea.

Brakes

Assemble the brake shoes using two shoes 37 and one hanger 38 for each. Drill a 0.5mm hole in a block of wood or melamine faced board, put a short length of wire in the hole and assemble the shoes and hanger onto this. Hold it in place with the tip of a knife, adjust the angles according to the drawing and solder together. Clean up and file the wire almost flush on both sides. The hole for the brake shoe is nearer the bottom of the hanger and the shoes fit at a slight angle (see drawing - exact angle is not critical). Ensure that you end up with a pair each of left handed and right handed.

Fit the two front assemblies using a piece of 0.5mm wire through the bottom holes to hold them in line and solder the hangers to the top wires. Repeat with the rear two brake shoe assemblies. Solder the brake shaft brackets 44 into the half-etched pockets behind the rear wheels and cut a length of 1.4mm rod, 18mm long for 16.5 gauge and 15.5mm for 14.0 mm gauge. Thread the rod through one bracket, slide two brake cranks 42 onto the rod and push the rod through the other bracket, position the rod with most of the overhang on the L/H side and solder to the brackets. Thread a length of 0.5mm wire through the rear brake hangers with two push rods 40 in the middle and solder to the brake hangers. Thread another length through the push rods with the cranks in between them. Position the pushrods about 1mm inside the frames and solder to the wire through the brake hangers. Slide the cranks out so

that they touch the push rods and solder push rods and cranks to the wire and brake shaft. Trim all the 0.5mm wires almost flush and the R/H side of the 1.5mm rod. Fit the brake screw casting to the L/H side noting the angle from the drawing and trim the rod almost flush this side as well. The front pull rods 46 fit similarly to the rear but just disappear from sight behind the wheels. Solder them to the brake hanger wire only.

Extra parts are included for the brake linkages under the cab, but they barely show so you might not want to bother fitting them. If you do, pin parts 39 to parts 41 with 0.5mm wire, noting the angles. The other end of the rod goes inside the brake cranks fitted previously and the top part of the linkage can be bent over and attached to the underside of the frame spacer.

Finally

Push out the rivets on the strips 36 and solder them to the ends of the frames. They are full height so, with the cut down frame type, fit them flush with the top edge and trim off the excess below. For the Joffre, the front ones need to be fitted after the buffer beam, so leave them until that is fitted. Trim the pins used for the valve spindles and fit the cylinder top covers; glue is safer then soldering. Cut a length of 1mm rod, 30mm for 16.5 gauge and 27.5mm for 14.0 gauge, solder the pair of operating levers 47 together, thread them on the rod between the motion bracket top eyes and position the rod with equal overhang both ends. Solder the rod to the eyes and solder the lever vertical in line with the gap between the boiler and the R/H tank. The lifting links and arms 26 & 27 can be assembled on the ends of the rod as per the drawing, Use 0.5mm wire to pin them together (you can glue them if you like as they are non-functional).

Even after taking all the care you can during building, it is likely that the chassis has stiff spots. These will ease in time, but to hurry it up, try running for a time with Brasso as a 'lubricant'. This will ease tight spots but it might still take an hour or so of running. Be sure to wash it off afterwards and oil normally when it runs smoothly. If yours comes out right first time, then lucky you, I wish all of mine did the same.

Designed and produced by Mark Clark - Locos n Stuff

Website – www.locosnstuff.co.uk

Enquiries, technical help – borsig1958@gmail.com or 01634 575081 before 8pm
12 Adelaide Road, Gillingham, Kent, ME7 4NJ

Parts List

1	L/H mainframe
2	R/H mainframe
3	Rear spacer (2 gauges)
4	Front spacer (2gauges)
5	Cylinder front (2 gauges)
6	Cylinder rear (2 gauges)
7	Cylinder mounting bracket (2 gauges)
8	Front cylinder covers x2
9	Rear cylinder covers x2
10	Cylinder front cap x2
11	Cylinder wrapper x2
12	Valve backing x2
13	Valve guide x2
14	Valve gland x2
15	Crosshead top x2
16	Crosshead x4
17	Slidebar x4
18	Motion bracket x2
19	Inner support x2
20	Outer brace x2
21	Motion bracket brace
22	Expansion link x4
23	Radius rod x4
24	Combination lever x4
25	Union link x4
26	Lifting link x4
27	Lifting arm x2
28	Fly crank x4
29	Fly crank rod x4
30	Side rod fronts x4
31	Side rod centres x4
32	Side rod rears x4
33	Connecting rod fronts x2
34	Connecting rod centres x2
35	Connecting rod rears x2
36	Frame rivet strips x4
37	Brake shoes x8
38	Brake hangers x4
39	Brake linkage x2
40	Brake rods rear x2
41	Brake rods x2
42	Brake cranks x4
43	Cylinder gland x2 (not used)
44	Brake shaft brackets x2
45	
46	Brake rods front x2
47	Valve operating arm x2

Motor	Mashima 10/24
Gearbox	High Level 54:1 Slimliner + drive extender
Wheels	Slaters 2’ 7 spoke PB Kerr Stuart pattern (2 flangeless)
Axles	Square ended for 16.5mm or 14mm
Crankpins	1mm with 1.5mm threaded bushes and 1mm washers
Allen key	Supplied (for wheel screws)

D 3 DriveStretcher Final Drive Carriage

(For SlimLiner+)

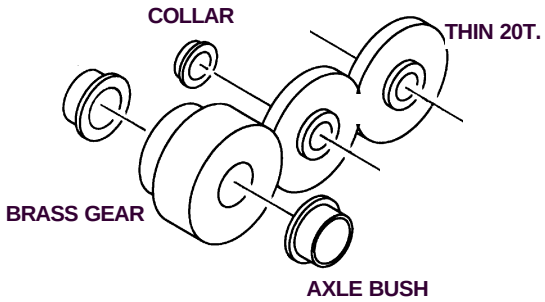

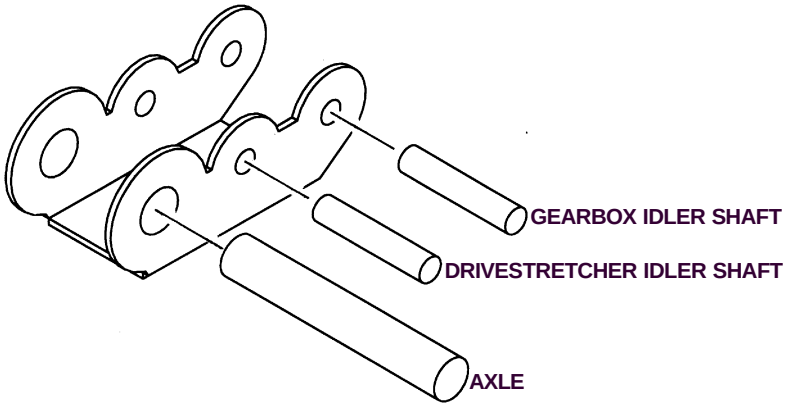

Study the diagram before starting work. Before cutting the etch from the fret, progressively ream out each of the **holes** to suit their shafts or bushes. Components should be offered up until they a tight push-fit in their holes. Remove burrs by inserting the tip of a drill bit (of much larger diameter than the hole) and gently rotating it between your fingers.

The axle bushes will be one of two types, depending on the axle diameter. Solder the **axle bushes** into place on the DriveStretcher with the larger-diameter shoulders on the *same side* of the etch as the bend lines. You can file the outside (non-shouldered) face of the bush flush or, alternatively, file the bushes to length so they eliminate any sideplay on the gearbox when fitted into the chassis.

Fit the DriveStretcher into the gearbox in the same way as you would fit the final drive carriage, using the **gearbox idler shaft** as the pivot. This shaft should include a thin 20T. The raised boss on the gear runs nearest the frame side. After checking the gear is still free to revolve, secure the shaft ends to the gearbox etch using a tiny amount of glue.

Fit the **DriveStretcher idler shaft** and gear into the DriveStretcher, along with the collar, and position and fix them as above.

Temporarily fit the axle and final **brass 20T**. gear into the DriveStretcher. If the motor is not fitted, check that all the gears revolve smoothly. Now **test the gearbox** under power. Remove the drive axle and brass gear. Fit the gearbox into the **chassis** by slotting the axle through the frames, the DriveStretcher and the brass gear, making sure the latter is correctly meshed with the idler gear.

If necessary, **fit washers** between the outside faces of the carriage and the inside of the frames, to stop the gearbox/carriage sliding along the axle, causing the gears to go out of mesh. The brass gear should run close up against axle bush.

The gears are effectively self-lubricating but a little plastics-compatible grease will do no harm. Do not use general-purpose modelling oil, which attracts dust and grit. Metal-on-metal contact areas (motor bearings, axle

RoadRunner Compact+ 30/40/54:1

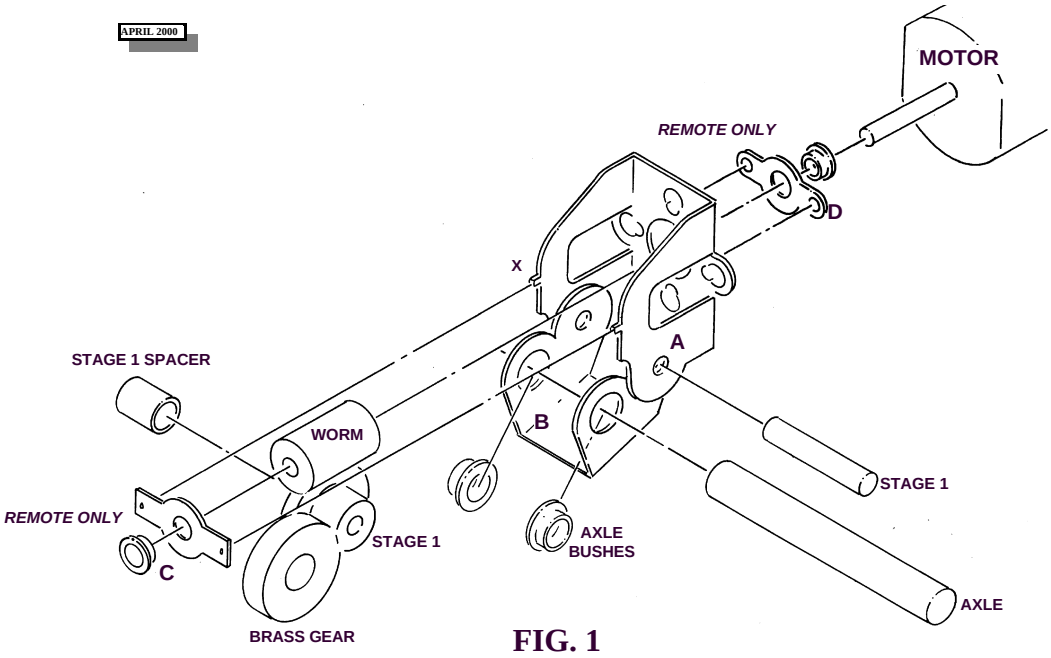

FIG. 1

Study Figs 1 and 2. Before cutting the gearbox etch from the fret, progressively ream out each of the **holes** to the sizes shown in Fig 2. Components should be offered up until they a tight push-fit in their holes. Once the gearbox is assembled, the shafts are fixed but the gears are free to revolve. Remove burrs by inserting the tip of a drill bit (of much larger diameter than the hole) and gently rotating it between your fingers.

Solder the **1/8in bushes** into place on the final drive carriage (B) with the larger-diameter shoulders on the *same side* of the etch as the bend lines. File the outside (non-shouldered) face of the bush flush. Remove burrs as above. Check that the motor mounting screws will pass though their holes and into the motor, carefully opening out the holes in the etch with a reamer if necessary. Opening out the holes allows you to move the motor vertically in order to adjust the mesh. Some modellers may prefer a deeper mesh (especially for a heavily loaded loco) but avoid 'bottoming out' the gears. If the mesh is too shallow, the gears may wear or even come out of mesh.

The kit includes the additional etched components (C, D) you will need to convert the gearbox into a remote-drive system, using cardan shafts linked to the motor by universal joints. The last will need to be sourced separately - Formil, Branchlines, NWSL and Exactoscale produce suitable designs. As the diameter of the input/output shaft varies between makes, you will need to provide your own bearings to fit into our remote drive attachments. For 1.5mm or 2mm shafts, ordinary ‘straw hat’ bearings available from Gibson, Sharman etc. will work reasonably well but for a proper engineering job, try to get some turned up from sintered bronze. The worm driveshaft should ideally be of hardened steel (like a motor shaft) but again, the silver steel supplied with the kit will do at a pinch. Before beginning construction, read the notes overleaf, covering remote drive attachments.

If you intend to use the **remote drive attachments**, open out their central holes to accept either a 1.5mm or 2mm bore bush, depending upon the diameter of your motor shaft. Solder these bushes into their holes, making sure they sit dead square.

Now cut the etches from the fret with a heavy blade and trim off the tabs, taking care not to accidentally remove any locators. **Fold up the gearbox** (A) as shown in Fig. 1, using flat nosed pliers to grip the motor mounting plate near the bend lines when doing so. This will prevent the plate from accidentally buckling across the hole centres. AII bends are 90 degrees, with the bend lines on the inside of the gearbox. Add fillets of solder to the inside of the folds to strengthen the gearbox. If you are using the **remote attachments**, open out the small location holes in the front attachment (C) so they fit snugly over the locators (X) on the main gearbox etch, and then solder it in place. Now fold up the final drive carriage (B) and strengthen with solder, as above. De-flux the gearbox and carriage by scrubbing them with household cleaner, then rinse and allow to dry. If they are likely to be visible then **paint** them black.

Using a carborundum disc in a mini-drill, cut the stage 1 **gearshaft** so its length equals the overall width of the gearbox. Wear effective eye protection – cutting discs can and do disintegrate if they snag. Remove any burrs with a fine file. If shafts are a tight fit, you will only be able to pass them through both sides of the etches if they are truly square. If they won't go through, then the etches haven't been folded accurately. Light finger tweaking should put things right.

Push the **worm** onto the motor shaft until its mid-point is 6mm from the front face of the motor. The worms provided may be either **brass or nylon**, according to type and gear ratio (they are not interchangeable). The nylon type worms should

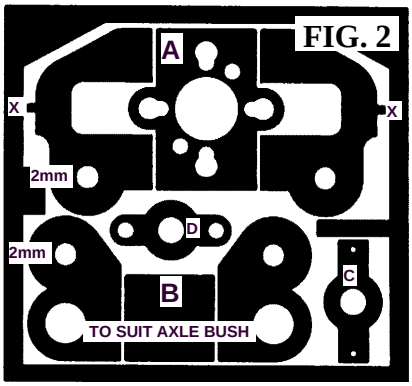

be a firm push fit on the motor shaft. Some brass worms supplied to us are fractionally tighter than others and if they aren't an easy push-fit, they can be gently forced onto the shaft in a vice. Don't use excessive force or the shaft may bend. Instead, use a broach to ease the fit of the worm and then, if necessary, secure the brass worm with a small drop of Loctite 601 at the outer end of the motor shaft.

A variety of **motor fixing holes** is provided, to allow for different screw spacings. We suggest that, if possible, you use the outer (lateral) or the diagonal screw holes, which will allow you to fit (and remove) the motor once the power unit is assembled and installed in the chassis. This will enable you to add wheels, valve gear and other fittings to a free-rolling chassis, and makes it much easier to identify and put right any tight spots or clearance problems.

If clearance restrictions dictate that the vertical motor mounting holes must be used, we suggest that the motor is fitted before the Stage 1 gearshaft and then the latter is lightly glued at one end only. Should the motor require attention, then the gearshaft can be easily removed by gently tapping it out with a drift. If you are using these vertical motor mounting holes, you can now **fit the motor** and worm assembly onto the gearbox and secure it with the fixing screws supplied with the motor.

Refer to Fig. 1. The stage 1 double gear will be one of three types - 15/10T (30:1), 20/10T (40:1) or 27/10 (54:1) - depending on the overall reduction ratio of the gearbox. The **final drive carriage** can be mounted facing backward or forward, depending on the configuration you require.

Offer up the final drive carriage and slot the stage **stage 1 gearshaft** through the gearbox and carriage, slipping on the double gear and spacer as you do so. Sight through the opening in the gearbox sides to check the mesh with the worm - there should be daylight between the gear and the worm, but avoid having too much backlash. If necessary, loosen the motor fixing screws and adjust the mesh. When satisfied, secure the shaft to the gearbox side using a tiny amount of glue. The unit will run smoothly if the final drive carriage is free to pivot about the idler shaft, but suitable restraint must be provided for the gearbox and motor in order to prevent the carriage from curling up on itself when torque is applied. It may be preferable fix the final drive carriage in one position (this position can be determined later, when the gearbox is installed).

Temporarily fit the axle and final **brass 20T**. gear into the gearbox. If the motor is not fitted, check that all the gears revolve smoothly. Now **test the gearbox** under power by fitting the motor and worm assembly as described above. Remove the drive axle and brass gear. Fit the gearbox into the **chassis** by slotting the axle through the frames, the gearbox and the brass gear, making sure the latter is correctly meshed with the stage 1 gear.

Fit washers between the outside faces of the carriage and the inside of the frames, to stop the gearbox/carriage sliding along the axle. The amount of movement may be small but if unchecked it will sandwich the gears together, causing premature wear. Washering will cure this problem. Use extra washers to eliminate all sideplay on the driven axle - aim for a running clearance only. The brass gear should run close up against the side of the carriage, away from the side face of the stage 1 gear. This clearance ('Z' in Fig. 3) must be maintained at all times. When satisfied, glue the brass gear to the axle using tiny spots of Loctite 601 applied with a pin. Rotate the axle to ensure an even distribution of the adhesive.

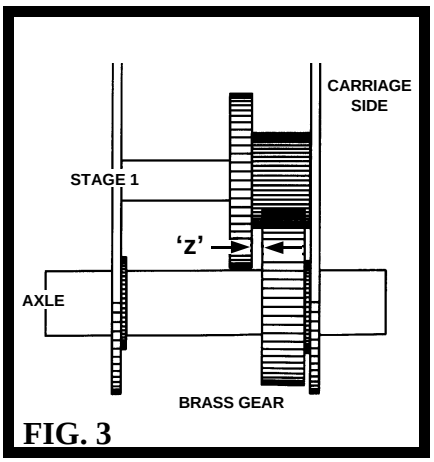

To use the **remote drive attachments** push the worm onto the driveshaft so that 3mm of the shaft is protruding and secure the worm with Loctite if necessary. Slot the short end of the shaft through the motor mounting plate and into the bearing in the front remote attachment (C). Slot the rear remote attachment (D) over the opposite end of the driveshaft and slide it up to the motor mounting plate (The gearbox can be driven from the opposite end by reversing the shaft). Work out how many washers you will need to centre the worm directly over the stage 1 gear and eliminate endfloat. Remove the shaft assembly, fit the washers on either side of the worm and then refit the shaft along with the washers. Secure the rear remote attachment to the motor mounting plate using 12B.A. nuts and bolts through the side holes. With the bolts partially tightened, position the attachment so its circular middle sits centrally over the hole in the motor mounting plate (like lining up a gun sight). Tighten up the bolts and test the gearbox. The worm and drive shaft can be removed at any time simply by unbolting the front remote attachment plate.

The gears are effectively self-lubricating but a little plastics-compatible grease will do no harm. Do not use general-purpose modelling oil, which attracts dust and grit. Metal-on-metal contact areas (motor bearings, axle bushes) should be lubricated with a tiny amount of Zeuthe ultra-adhesive oil.

FOR MORE INFORMATION ON HIGH LEVEL *PRECISION* GEARBOXES CONTACT
HIGH LEVEL, 14 TUDOR ROAD, CHESTER-LE-STREET, CO. DURHAM, DH3 3RY.
WEBSITE - WWW.HIGHLEVELKITS.CO.UK
E MAIL - ENQUIRIES@HIGHLEVELKITS.CO.UK

SlimLiner+ 30/40/54:1 Gearbox

FEB 2003

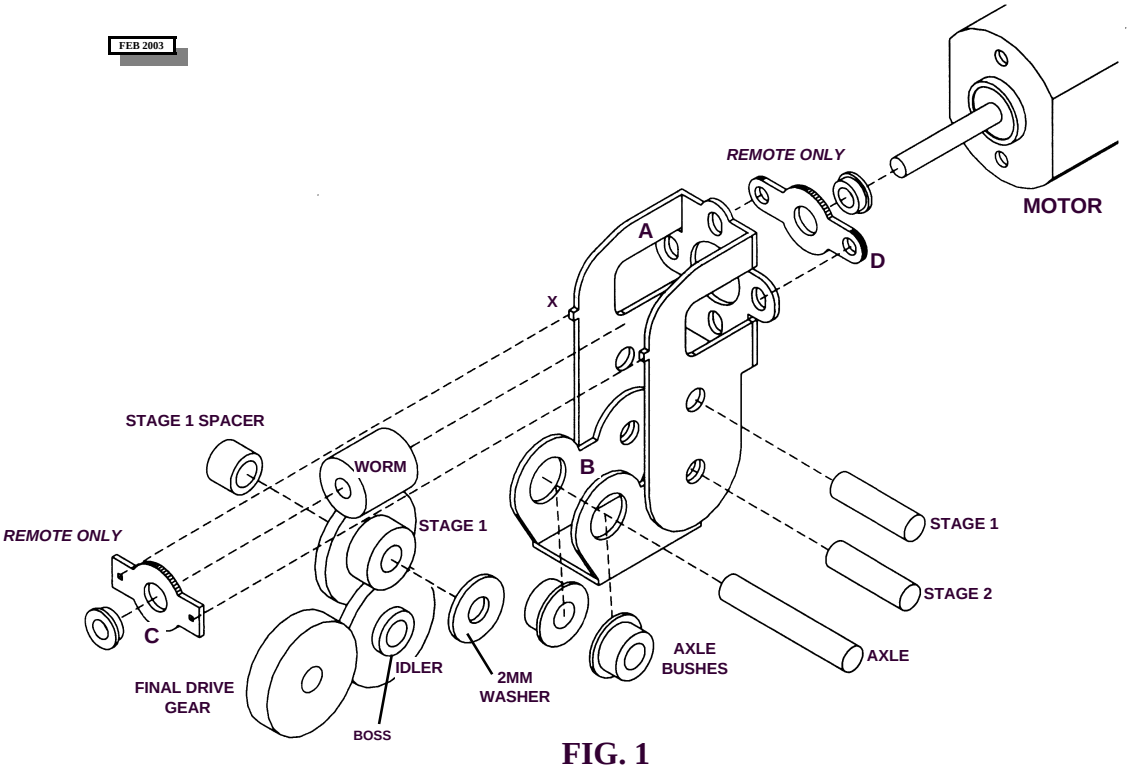

FIG. 1

Study Figs 1 and 2. Before cutting the gearbox etch from the fret, progressively ream out each of the **holes** to the sizes shown in Fig 2. Components should be offered up until they a tight push-fit in their holes. Once the gearbox is assembled, the shafts are fixed but the gears are free to revolve. Remove burrs by inserting the tip of a drill bit (of much larger diameter than the hole) and gently rotating it between your fingers.

The axle bushes will be one of two types, depending on the axle diameter. Solder the **axle bushes** into place on the final drive carriage (B) with the larger-diameter shoulders on the *same side* of the etch as the bend lines. You can file the outside (non-shouldered) face of the bush flush or, alternatively, file the bushes to length so they eliminate any sideplay on the gearbox when fitted into the chassis. Remove burrs as above. Check that the motor mounting screws will pass though their slots and into the motor.

The kit includes the additional etched components (C, D) you will need to convert the gearbox into a remote-drive system, using cardan shafts linked to the motor by universal joints. The last will need to be sourced separately - Formil, NWSL and Exactoscale produce suitable designs. As the diameter of the input/output shaft varies between makes, you will need to provide your own bearings to fit into our remote drive attachments. Ordinary 'straw hat' bearings available from Gibson, Sharman etc. will work reasonably well but for a proper engineering job, try to get some turned up from sintered bronze. The worm driveshaft should ideally be of hardened steel (like a motor shaft) but again, the silver steel supplied with the kit will do at a pinch. Before beginning construction, read the notes overleaf, covering remote drive attachments.

If you intend to use the **remote drive attachments**, open out their central holes to accept either a 1.5mm or 2mm bore bush, depending upon the diameter of your motor shaft. Solder these bushes into their holes, making sure they sit dead square.

Now cut the etches from the fret with a heavy blade and trim off the tabs, taking care not to accidentally remove any locators. **Fold up the gearbox** (A) as shown in Fig. 1, using flat nosed pliers to grip the motor mounting plate near the bend lines when doing so. This will prevent the plate from accidentally buckling across the hole centres. AII bends are 90 degrees, with the bend lines on the inside of the gearbox. Add fillets of solder to the inside of the folds to strengthen the gearbox. If you are using the **remote attachments**, open out the small location holes in the front attachment (C) so they fit snugly over the locators (X) on the main gearbox etch, and then solder it in place. Now fold up the final drive carriage (B) and strengthen with solder, as above. De-flux the gearbox and carriage by scrubbing them with household cleaner, then rinse and allow to dry. If they are likely to be visible then **paint** them black.

Using a carborundum disc in a mini-drill, cut the stage 1 and idler **gearshafts** so their length equals the overall width of the gearbox. Wear effective eye protection – cutting discs can and do disintegrate if they snag. Remove any burrs with a fine file. If shafts are a tight fit, you will only be able to pass them through both sides of the etches if they are truly square. If they won't go through, then the etches haven't been folded accurately. Light finger tweaking should put things right.

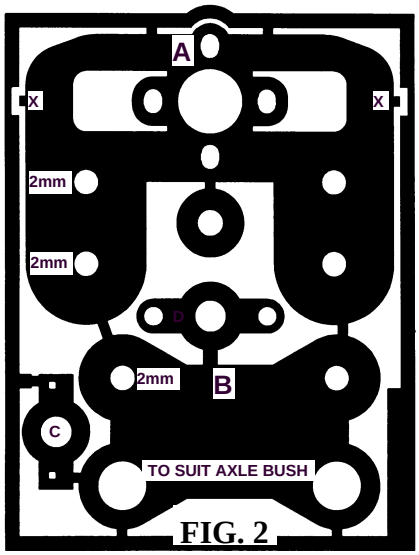

FIG. 2

Push the **worm** onto the motor shaft until its mid-point is 6mm from the front face of the motor. The worms provided may be either **brass or nylon**, according to type and gear ratio (they are not interchangeable). The nylon type worms should be a firm push fit on the motor shaft. Some brass worms supplied to us are fractionally tighter than others and if they aren't an easy push-fit, they can be gently forced onto the shaft in a vice. Don't use excessive force or the shaft may bend. Instead, use a broach to ease the fit of the worm and then, if necessary, secure the brass worm with a small drop of Loctite 601 at the outer end of the motor shaft.

A variety of **motor fixings options** is provided, to allow for different motor types. The vertical slots will accommodate the Mashima 10 series motors (these have 8.5mm mounting screw centres) as well as narrower open-framed motors, such as the Mashima 9/16 (which have 8mm screw centres). The horizontal slots are spaced to suit the 10 series only. If possible use the latter as this will allow you to fit (and remove) the motor once the power unit is assembled and installed in the chassis. This will enable you to add wheels, valve gear and other fittings to a free-rolling chassis, and makes it much easier to identify and put right any tight spots or clearance problems. The motor can be removed or refitted at any stage of construction.

If clearance restrictions dictate that the vertical motor mounting holes must be used, we suggest that the motor is fitted before the Stage 1 gearshaft and then the latter is lightly glued at one end only. Should the motor require attention, then the gearshaft can be easily removed by gently tapping it out with a drift. If you are using these vertical motor mounting holes, you can now **fit the motor** and worm assembly onto the gearbox and secure it with the fixing screws supplied with the motor.

Refer to Fig. 1. The stage 1 double gear will be one of three types - 15/10T (30:1), 20/10T (40:1) or 27/10 (54:1) - depending on the overall reduction ratio of the gearbox. Fit the **stage 1 gearshaft**, double gear (according to ratio) the spacer bush and the etched thrust washer (with the ribbed side facing the gear) into the gearbox. Sight through the opening in the gearbox sides to check the mesh with the worm - there should be daylight between the gear and the worm, but avoid having too much backlash. Some modellers may prefer a deeper mesh (especially for a heavily loaded loco) but avoid 'bottoming out' the gears. If the mesh is too shallow, the gears may wear or even come out of mesh. If necessary, loosen the motor fixing screws, adjust the mesh and then lightly glue the shaft in place.

The **final drive carriage** can be mounted facing backward or forward, depending on the configuration you require. Offer up the final drive carriage and slot the **idler gearshaft** through the carriage and gearbox, slipping on the thin 20T. gear as you do so. (Note that the larger boss on this gear runs nearest the gearbox side). Secure the shaft to the carriage side using a tiny amount of glue. The unit will run smoothly if the final drive carriage is free to pivot about the idler shaft, but suitable restraint must be provided for the gearbox and motor in order to prevent the carriage from curling up on itself when torque is applied. It may be preferable fix the final drive carriage in one position (this position can be determined later, when the gearbox is installed).

Temporarily fit the final **brass 20T**. gear and axle into the final drive carriage. If the motor is not fitted, check that all the gears revolve smoothly. Now **test the gearbox** under power by fitting the motor and worm assembly as described above. Remove the drive axle and brass gear. Fit the gearbox into the **chassis** by slotting the axle through the frames, the gearbox and the brass gear, making sure the latter is correctly meshed with the idler gear. You may need to fit washers between the gearbox sides and the frames in order to prevent the gearbox from moving sideways on the axle. It is also advisable to fit washers behind the wheels on this axle in order to eliminate any sideplay. When you are happy with the position of the gear and gearbox on the axle, glue the brass gear to the axle using tiny spots of Loctite 601 applied with a pin. Rotate the axle to ensure an even distribution of the adhesive.

To use the **remote drive attachments** push the worm onto the driveshaft so that 3mm of the shaft is protruding and secure the worm with Loctite if necessary. Slot the short end of the shaft through the motor mounting plate and into the bearing in the front remote attachment (C). Slot the rear remote attachment (D) over the opposite end of the driveshaft and slide it up to the motor mounting plate (The gearbox can be driven from the opposite end by reversing the shaft). Work out how many washers you will need to centre the worm directly over the stage 1 gear and eliminate endfloat. Remove the shaft assembly, fit the washers on either side of the worm and then refit the shaft along with the washers. Secure the rear remote attachment to the motor mounting plate using 12B.A. nuts and bolts through the side holes. With the bolts partially tightened, position the attachment so its circular middle sits centrally over the hole in the motor mounting plate (like lining up a gun sight). Tighten up the bolts and test the gearbox. The worm and drive shaft cn be removed at any time simply by unbolting the front remote attachment plate.

The gears are effectively self-lubricating but a little plastics-compatible grease will do no harm. Do not use general-purpose modelling oil, which attracts dust and grit. Metal-on-metal contact areas (motor bearings, axle bushes) should be lubricated with a tiny amount of Zeuthe ultra-adhesive oil.

FOR MORE INFORMATION ON HIGH LEVEL *PRECISION* GEARBOXES CONTACT
HIGH LEVEL, 14 TUDOR ROAD, CHESTER-LE-STREET, CO. DURHAM, DH3 3RY.
WEBSITE - WWW.HIGHLEVELKITS.CO.UK
E MAIL - ENQUIRIES@HIGHLEVELKITS.CO.UK
Feb 2003