Locos n Stuff

Industrial and Narrow Gauge

by Mark Clark

borsig1958@gmail.com

01634 575081 before 8pm

Basic chassis

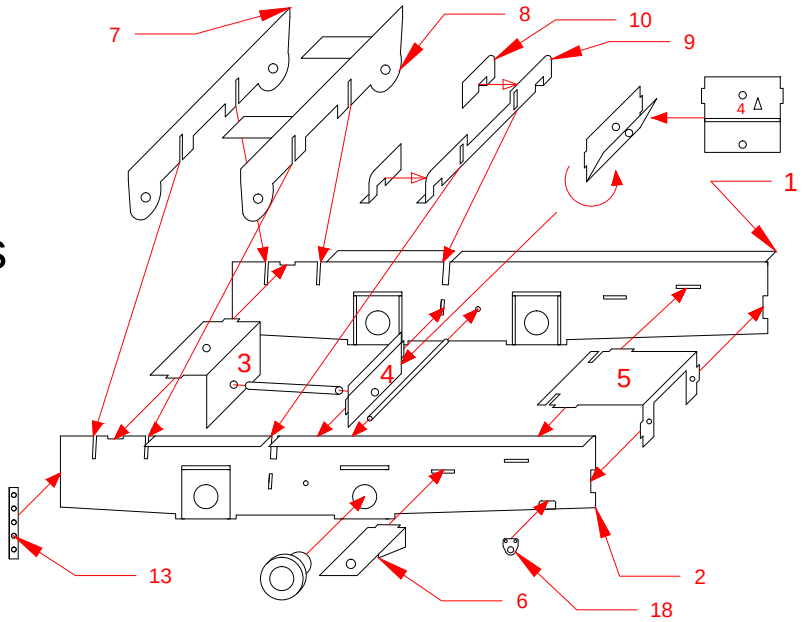

Cylinders and brake gear

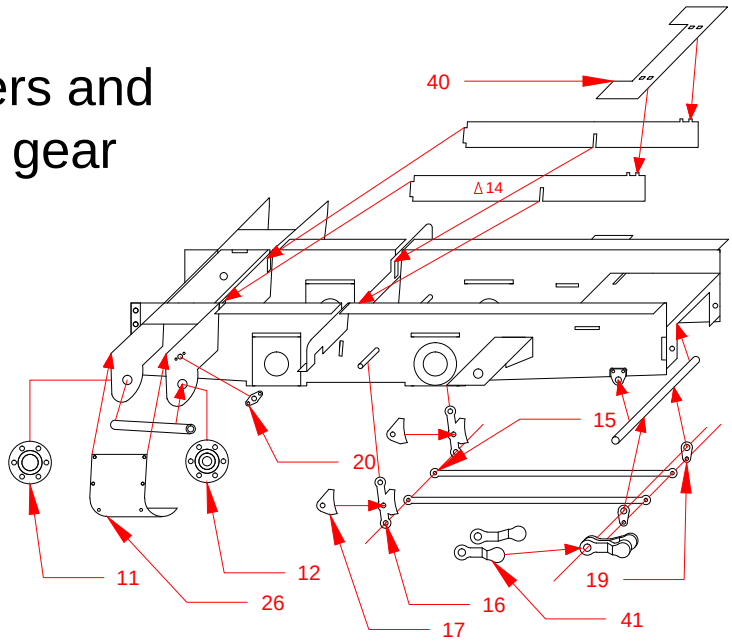

Locos n Stuff

Industrial and Narrow Gauge

by Mark Clark

borsig1958@gmail.com

01634 575081 before 8pm

Motor, wheels, slidebars and crossheads

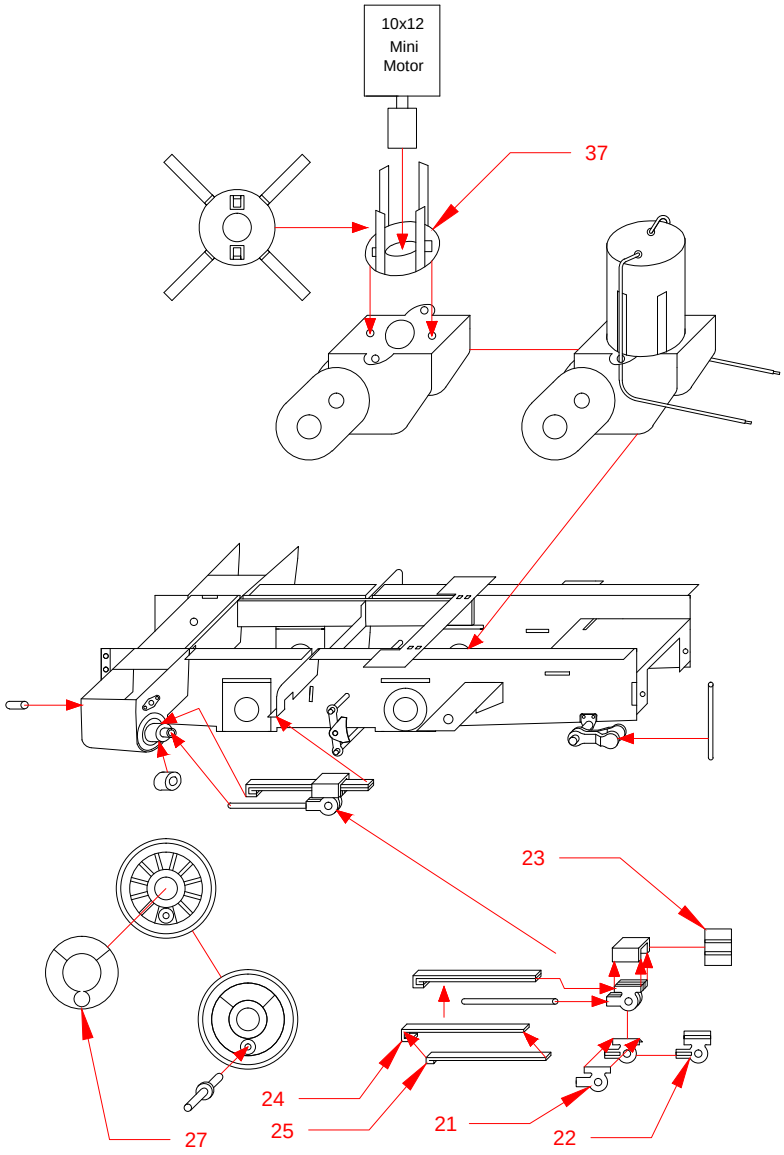

Locos n Stuff

Industrial and Narrow Gauge

by Mark Clark

borsig1958@gmail.com

01634 575081 before 8pm

Coupling and connecting rods

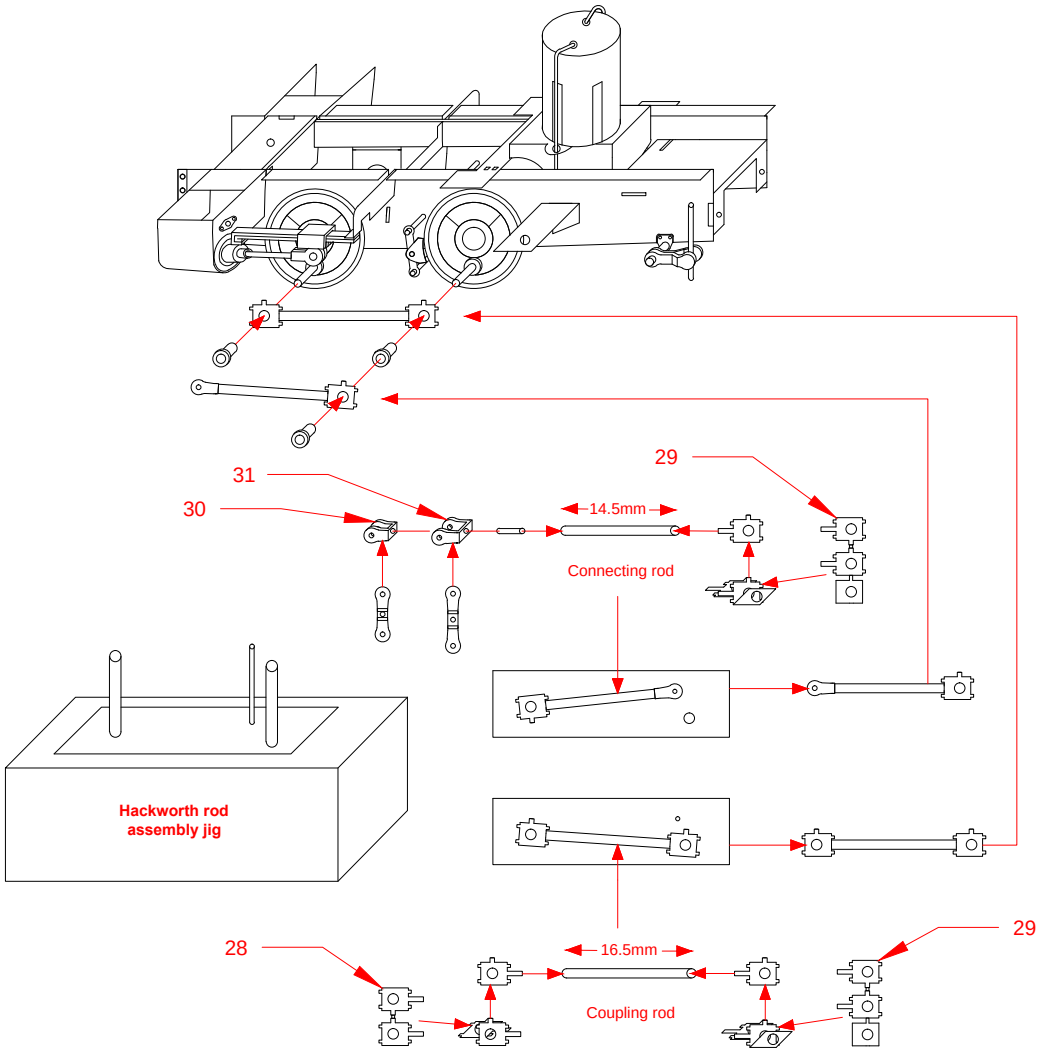

Valve gear

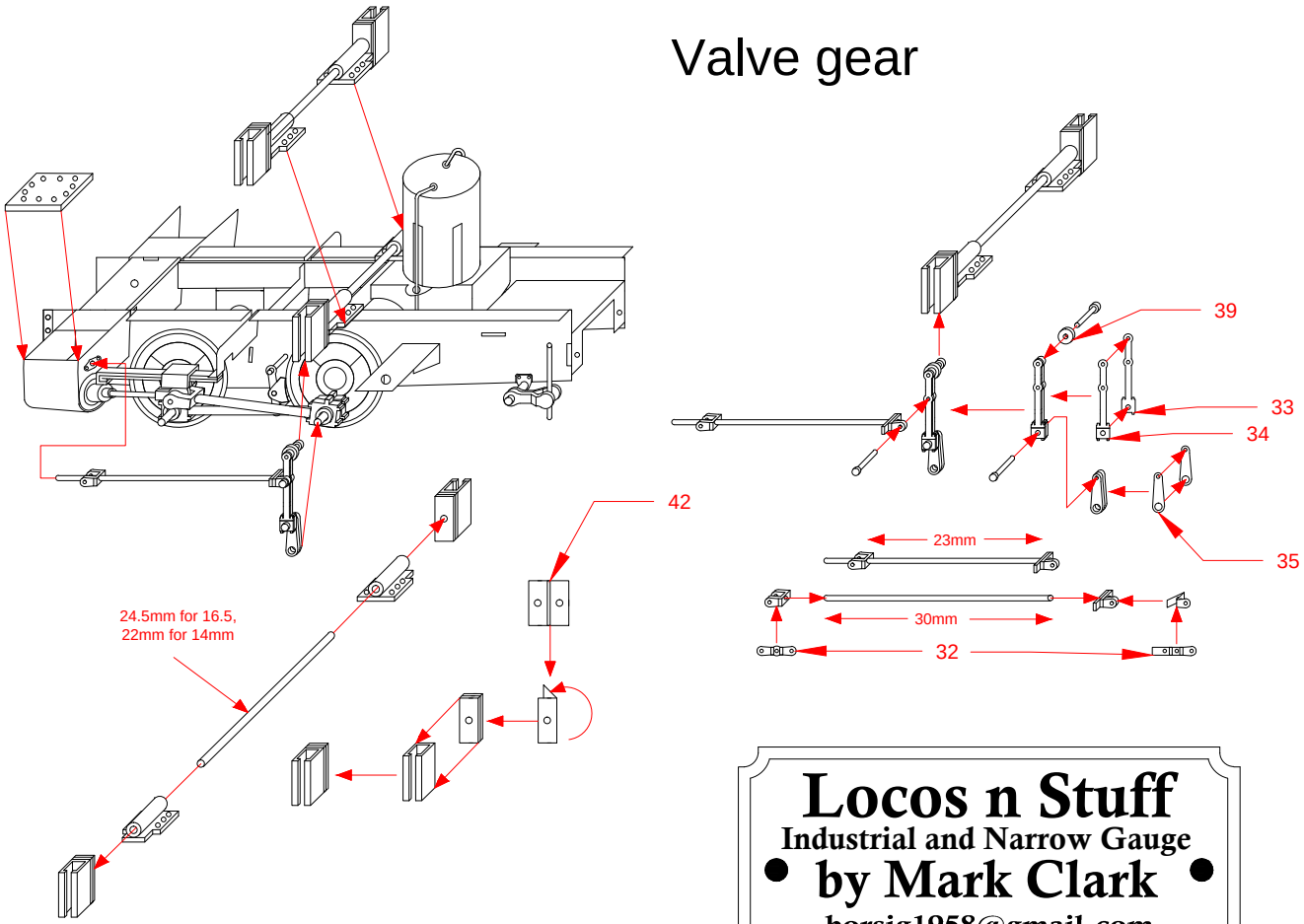

Locos n Stuff
Industrial and Narrow Gauge
by Mark Clark
borsig1958@gmail.com
01634 575081 before 8pm

Locos n Stuff

Industrial and Narrow Gauge

by Mark Clark

borsig1958@gmail.com

01634 575081 before 8pm

Cab floors and bunkers

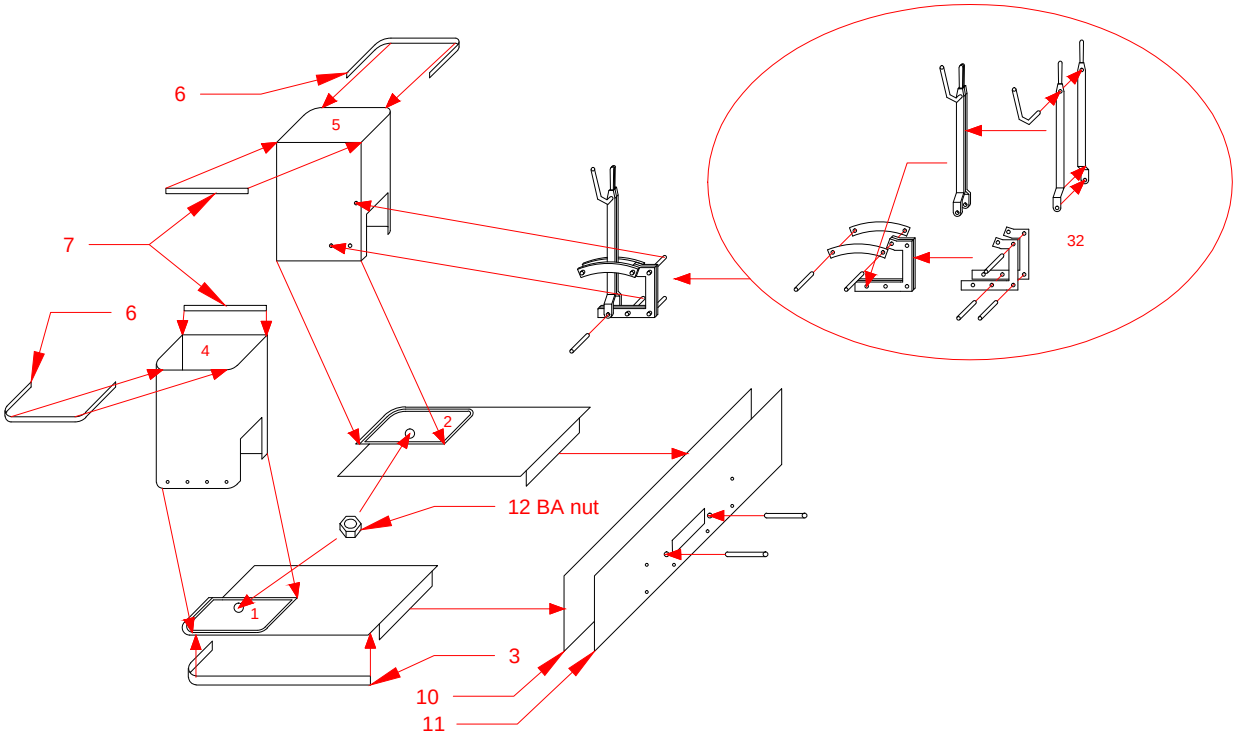

Cab frame and roof

Locos n Stuff
Industrial and Narrow Gauge
by Mark Clark
borsig1958@gmail.com
01634 575081 before 8pm

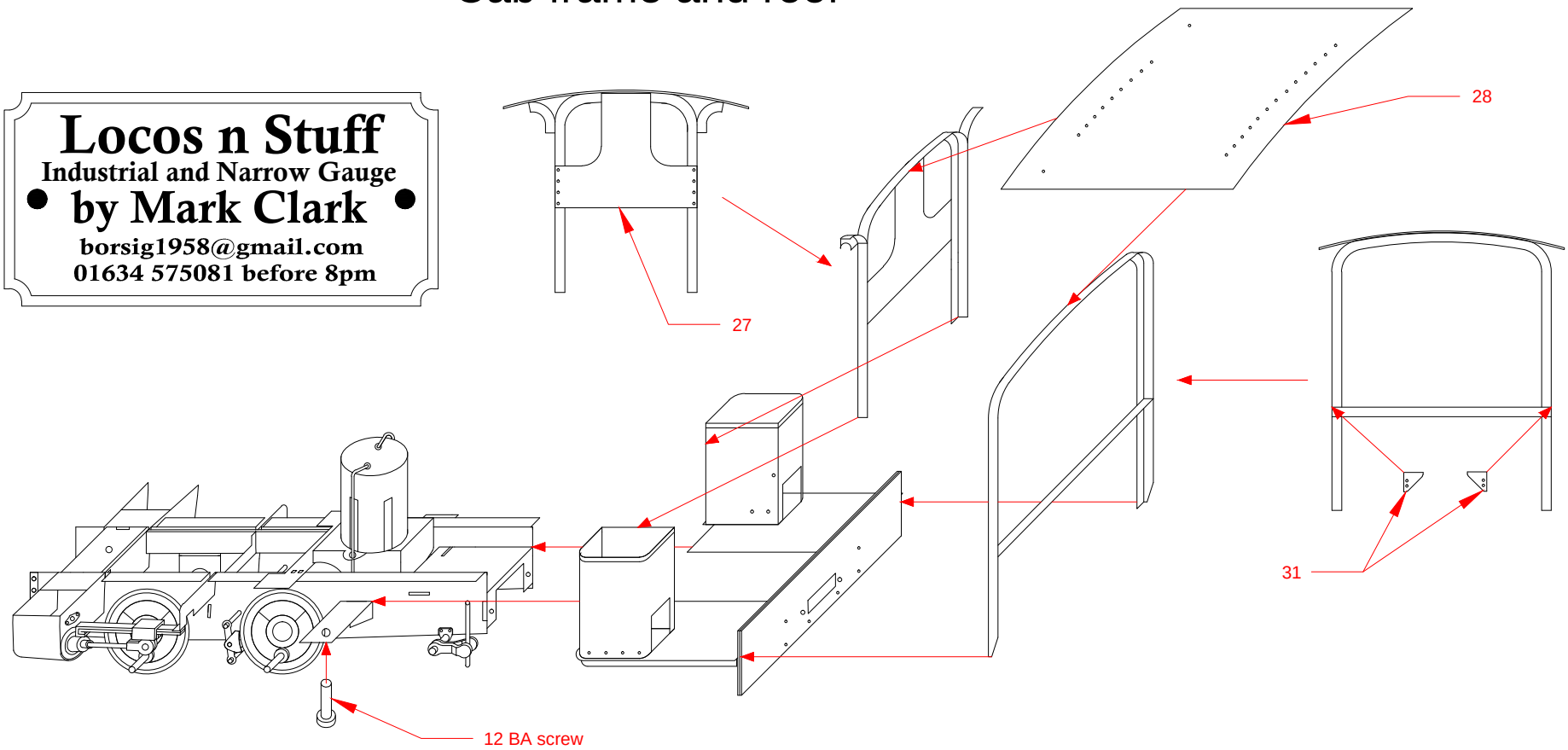

Locos n Stuff
Industrial and Narrow Gauge
by Mark Clark
borsig1958@gmail.com
01634 575081 before 8pm

Boiler assembly

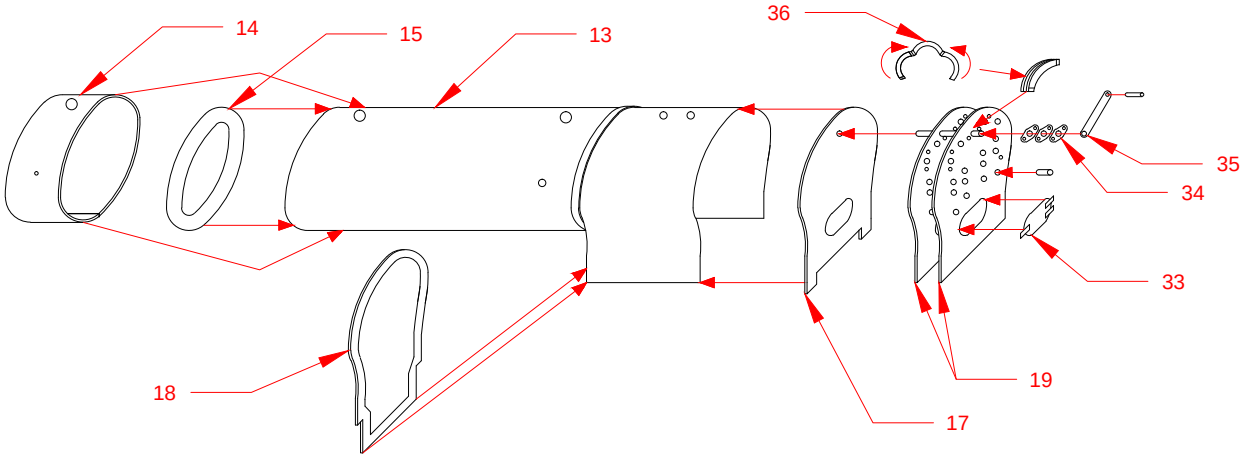

Locos n Stuff
Industrial and Narrow Gauge
by Mark Clark
borsig1958@gmail.com
01634 575081 before 8pm

Boiler fitting

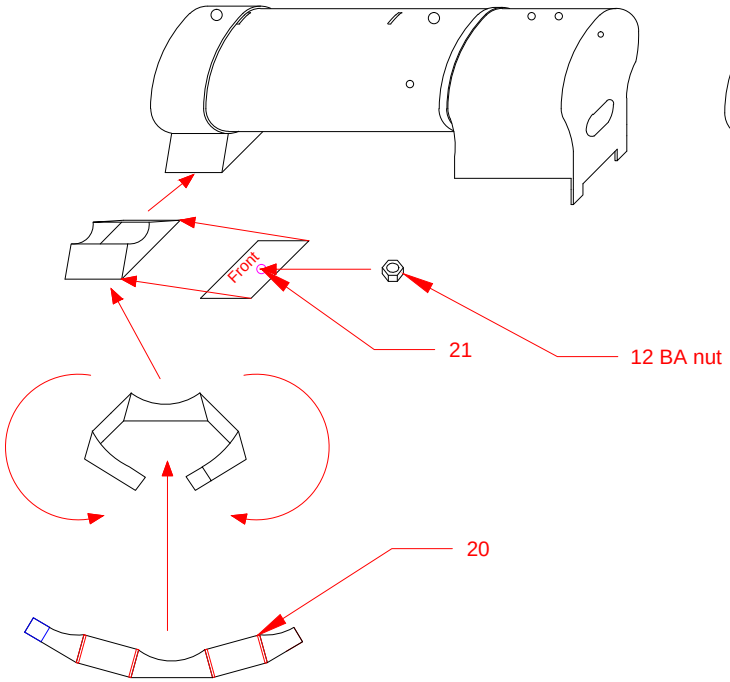

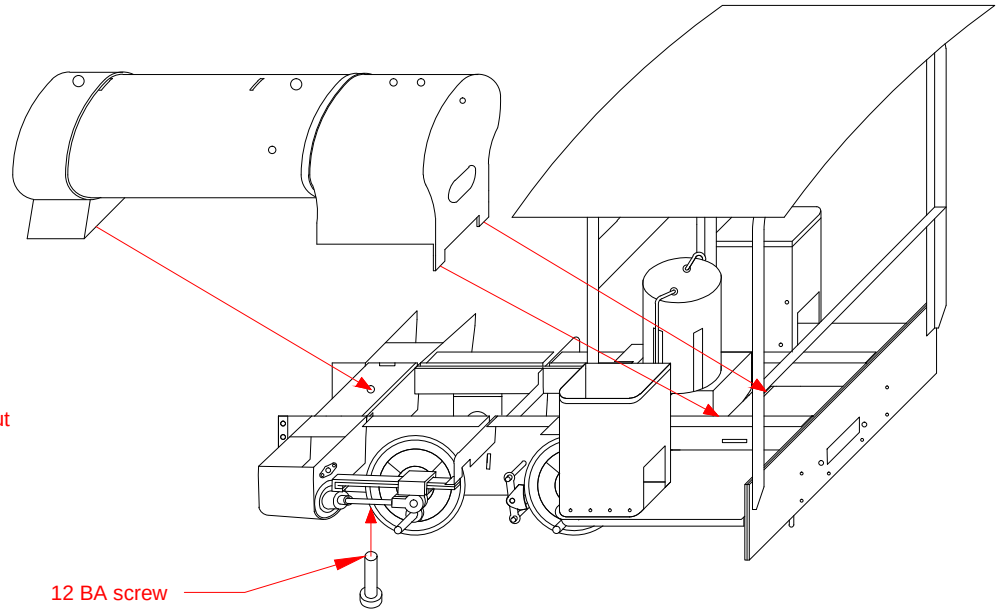

Locos n Stuff
Industrial and Narrow Gauge
by Mark Clark
borsig1958@gmail.com
01634 575081 before 8pm

Saddle tank and fittings

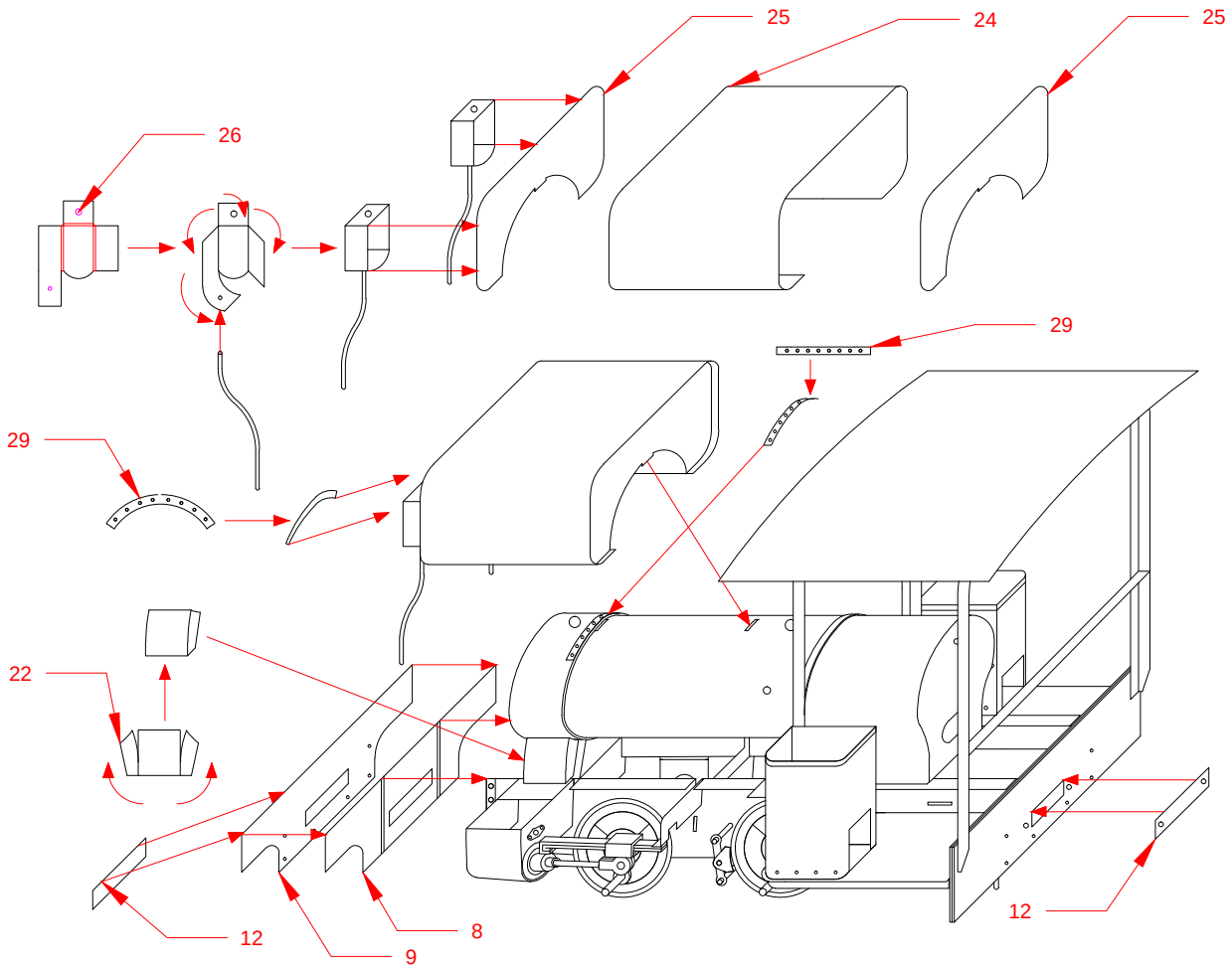

Template for cab front
and rear angle sections

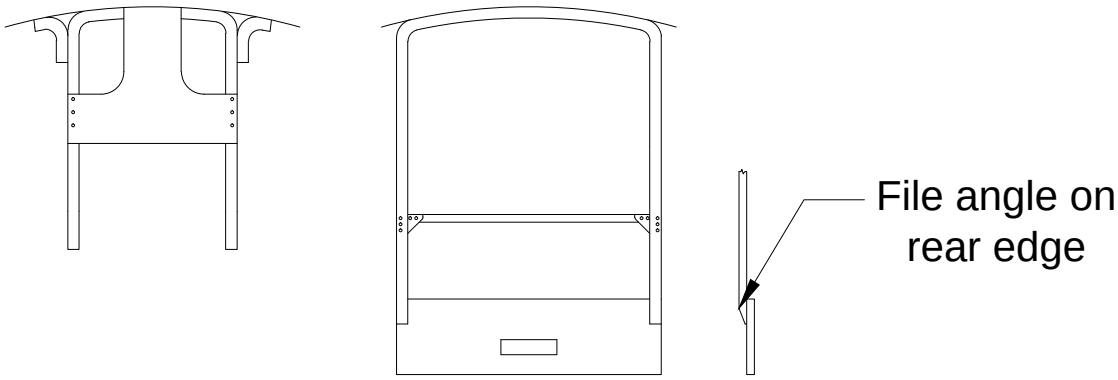

Template for cab front
and rear angle sections

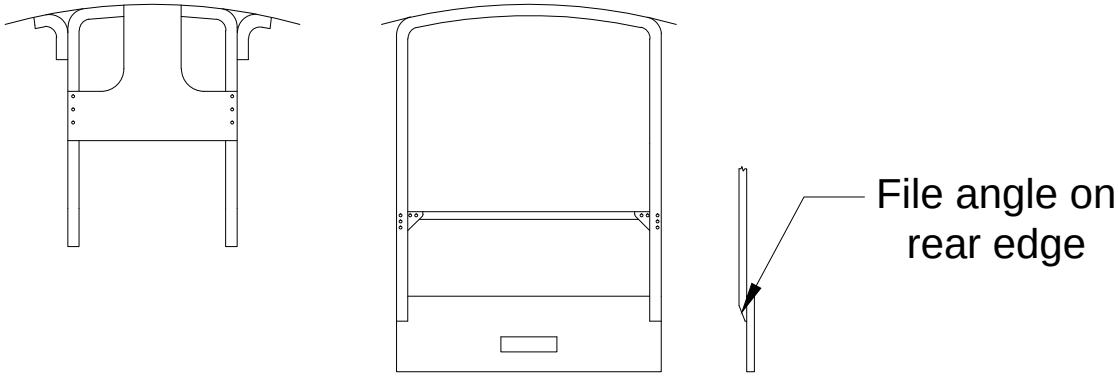

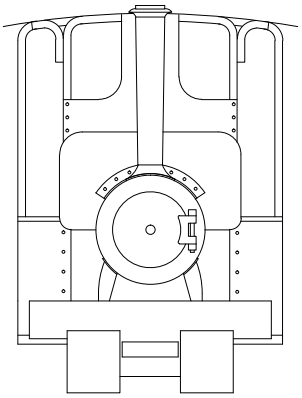

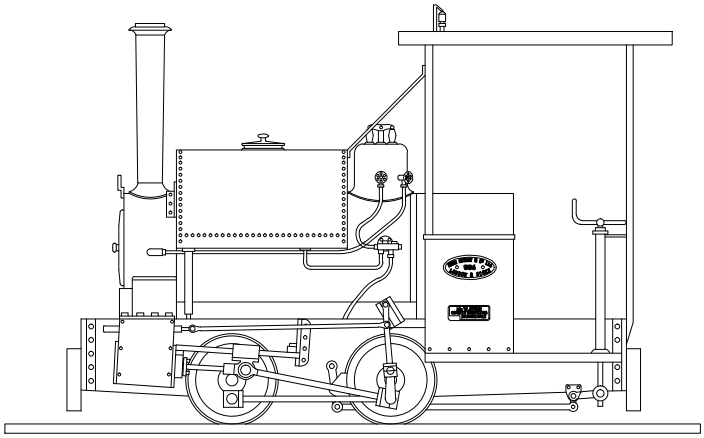

Locos n Stuff

Industrial and Narrow Gauge

by Mark Clark

borsig1958@gmail.com

01634 575081 before 8pm

Kerr Stuart Wren 0-4-0ST

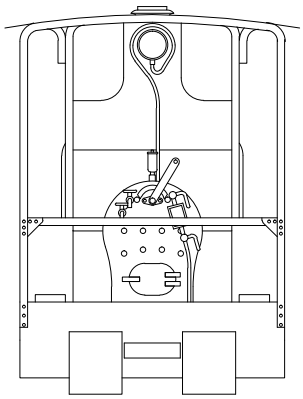

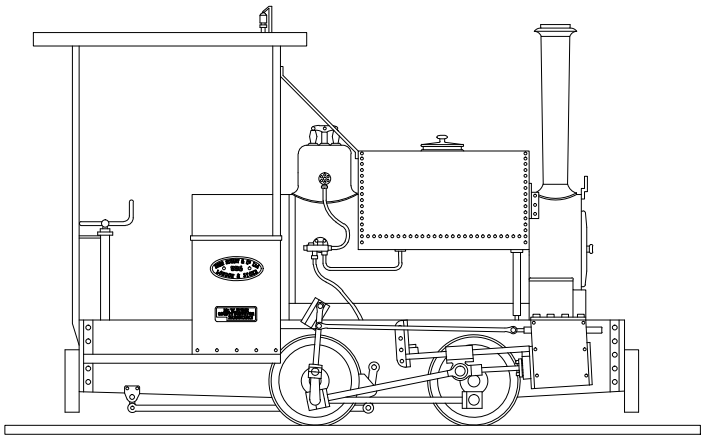

Kerr Stuart Wren 0-4-0ST

It is best to copy these files to your computer and use them from there. Keep the disc as a backup in case of accidental deletion. A lot of people try to use discs in a similar manner to flash drives, opening several items at once, which discs definitely don't like. This makes for slow operation and "not responding"messages.

The Prototype

The Wren was designed primarily for construction work, whereas now we have dumper trucks and JCBs, in the early 1900s they had a Wren or similar, skips and men with shovels. They were used on building sites, road construction and later proved popular with municipal councils and sewerage works. They could run on track normally only usable by hand pushed wagons so temporary track could be laid almost anywhere and very quickly.

A surprising number have survived as they were cheap to buy from their last user, small, light and easy to squirrel away in a lock up until funds or opportunity came along for a rebuild. Thomas Wicksteed at Kempton Park is a new build, which is very nice, but be careful using it for reference as it differs from the originals.

Technical details

Cylinders 6 inch dia x 9 inch stroke, wheels 20 inches, wheelbase 3 foot, boiler pressure 140psi, water capacity 87 gallons, fuel space 5.5 cu ft, grate area 2.19 sq ft, weight empty 3 tons 7 cwt, weight in working order 4 tons 3 cwt and tractive effort 2,016 lbs.

The Kit

Please note;
The cab frame template is printed to the exact size and supplied. The sketches and drawings will also print to the exact size, as long as you check that the print is to 100% and set for Auto landscape/portrait. The drawing can be measured, as it is accurate, but the assembly sketches are for illustration only and the measurements cannot be relied upon.

I have covered most options in the design of this kit, not that there are that many. I have tried to make it as easy to build as I can, but it is a small loco and therefore fiddly. Average building and soldering skills should result in a working model but you can always call me if you run into problems.

The two areas where the kit is not true to the prototype are the firebox, which was extended into the cab by a scale 6 inches and slightly widened, and the width of the cab. This was necessary as even the mini motor used in the kit needs somewhere to go. My original idea was for a Mashima 10/15 but there just isn't enough room.

The cab floor is outside the rear wheels, so has been set to give clearance for 16.5mm gauge. This makes the cab around 4mm too wide. Not much can be done about this for 16.5mm, but 14mm builders could narrow the cab if they wish. This would involve adjustments to the cab floors, buffer beam, roof and cab frames, none of which is beyond the average builder.

It is designed to be built with compensation but can be built rigid if you prefer, you will need to exchange the hornblocks for a pair of bushes. Running quality will suffer with a rigid chassis due to poor power pick-up. The frames are built to 14mm gauge and 16.5mm is achieved by using the wider cylinders and motion bracket and shims behind the wheels. The loco would suffer visually if the frames were spaced wider and I have found no evidence that any were built to a gauge wider than two foot. I expect I will now be inundated with photos of Wrens in wider gauges, which I will politely ignore.

When layering parts together, clean up the etch tags after soldering as it is quicker and gives a better result. Tags on all parts will need filing off but do not clean up excessively as it is not necessary and can be detrimental to the fit of the parts. Only file back the etch cusp if it is an outside edge that can be seen, otherwise don't bother.

Where the instructions say to fold a piece, it will be to 90° with the etched line on the inside of the fold. Where they say to fold double, it will be to 180° with the etched line on the outside of the fold. Double check all parts before folding because if you re-fold a part the other way, it will almost certainly snap off.

Contents of the box

1 x Body etch	2 x 3x2 tube, 1.5mm long
1 x Chassis etch	25mm 2x1 tube
2 x 1/8th bushes	2 x 45mm 1.3x0.8 tube
4 x Scalelink 12mm wheels	100mm 0.3mm PB wire
4 x crankpins with 6 x bushes	100mm 0.5mm brass wire
1 x High Level gearbox 54:1	100mm 0.5mm copper wire
1 x Mini motor (adaptor fitted)	3 x 50mm 0.7mm NS wire
1 x PCB (for pick ups)	35mm 1.0mm brass wire
2 x High Level hornblocks	Front cab frame (pre-formed)
1 x CD with instructions	2 x Cab frame corners (pre-formed)
1 x printed cab frame template	Rear cab frame (pre-formed)
2 x Valve gear slides	Pre-assembled jig for side rods

Locos n Stuff
Industrial and Narrow Gauge
• by Mark Clark •
borsig1958@gmail.com
01634 575081 before 8pm

Kerr Stuart Wren 0-4-0ST body

You will need the chassis built at least to the point of having wheels, motor and gearbox before starting the bodywork.

The mainframes run through the cab so most of the brass bits sit on or fit around the frames. As each section is built, test fit repeatedly so that you know that things can be assembled and disassembled later. There is a specific order for assembly which must be followed.

Note that the lead supplied is not for weighting, it is for making dumb buffers. If you don't need these then use it for what you will.

Cab assembly

Solder a 12BA nut over the holes in the footplate sections 1 & 2 and solder the valences 3 around 0.5mm in from the edge. Curve the bunkers 4 & 5 around a rod of about 2mm diameter to fit the etched line on the footplate, fold on the etched line and try them for fit, minor tweaks will be required to get a good fit. When happy, solder the join and solder to the footplate. Solder the beading 6 & 7 in place level with the top edge. Fold down the rear flap on each footplate. Cut two 12BA screws down to 5mm or so and attach the footplate sections to the chassis but leave slightly loose.

Push out the rivets in part 11 and solder the two rear buffer beam layers 10 & 11 together, open out the holes and solder in 4mm lengths of 0.7mm wire. Open out the matching holes in the rear chassis spacer until the buffer beam plugs in from the rear. Adjust the fit of the footplates so that they sit level and the rear flaps touch the buffer beam which should be hard up against the rear of the frames. You may have to elongate the holes in the supports slightly to achieve this. When happy, solder the rear flaps to the buffer beam but solder nothing to the chassis.

Assemble the reverser 32 by following the sketch. Lay one frame on your work board and drill through the holes 0.5mm into the board. Put short pieces

of wire in the holes, add the second frame and solder together. Finish off the rest of the parts, remove from the board and check against the three holes in the R/H bunker inner side. Trim off almost flush all the wires facing the boiler and all on the bunker side except the three that fit in the holes. Make sure that it fits easily and put aside until after painting.

The cab angle irons come ready formed but may require trimming and slight tweaking to fit. The total height at the centre should be 42.5mm and the bottom 3mm of each leg should be filed at an angle – see drawing. Make sure by measuring that the uprights are parallel and the width across the angle should be 33 – 34mm. Lay the frame flat and solder a length of angle across the back with the bottom edge 14mm from the bottom of the uprights. Gusset plates 31 are included for the corners here but are very fiddly to fit, leave them off if you don't want to attempt them. Mark a line 4mm down from the top of the buffer beam and solder the frame in place with its bottom edges touching this line, equal distance in from each side and upright.

After tweaking the front frame in a similar manner to get a height of 32mm and a width over the outside of 22.5mm, lay it on the drawing supplied, flat side down, and position the small angle sections as marked. Double sided tape on the drawing will help hold everything in place. Make sure they match the curve of the roof and solder in place. **It has been pointed out by at least three people that the short pieces should actually be strip, not angle. Use two short pieces cut from the etch waste to represent these instead of angle. Later kits won't have the angle pieces included.** Turn it over and try the cab front 27 for fit, it may need slight trimming. Push out the rivets and solder in place. The front frame fits between the bunkers flush with the front. Trim the beading where needed until it fits. Solder in place ensuring that it is upright and the same height as the rear. Use a small amount of solder as this may take two or three goes to get right.

Check the frames from all angles to make sure that they are upright and parallel to each other, then fit the roof 28 with the rivets in line with the angle sections, solid line at the rear. The roof has just a gentle curve which can be formed in your fingers. To remove the cab, remove the screws and slide the complete assembly backwards.

Boiler assembly

Clean up the edges of the boiler 13 and with a pair of scissors, cut about 6mm along the edge of the rear boiler band as shown in the drawing. Roll the whole boiler and firebox until the seam will join and solder from the inside. Using the firebox rear 17 as a guide, re-bend the firebox part to match. When it does, solder the rear 17 flush with the rear edge and the front 18 in line with the edge that you cut. Make sure that the bottom edges of the wrapper are equal both sides. Remove the joining piece across the bottom of part 18.

Roll the smokebox wrapper 14 to fit and solder in place with the extra hole on the left. The smokebox front 15 should fit in the end of the boiler tube. You

may have to file around it gently to get it in. Stand the boiler on end and push the front down until it is flush with the front edge of the boiler and solder in place. Fold the saddle 20 to shape overlapping and soldering the half etched parts. Solder a 12BA nut over the hole in the smokebox base 21 noting which way round it goes. Try it for fit in the bottom of the saddle, trimming the edges lightly until it is slightly recessed in the base of the saddle and solder in place.

Fit the saddle to the chassis with a screw, bend the tags at the bottom of the firebox rear backwards about 20° and plug into their slots in the rear frame spacer. The boiler should sit on the saddle with the firebox sides resting on the frame tops and be level relative to the frame top edges. A little filing here and there will be required to get a good fit with no gaps. When happy, solder the boiler to the saddle.

Some Wrens, Pixie for one, had external pipes covered by a tapered box either side of the smokebox. Part 22 folds up to represent this box and can be soldered in place where it touches the smokebox but not the frames.

Solder together the two backheads 19 and open out all the larger holes to 0.7mm. Solder a piece of 0.7 wire into the top centre hole protruding 3mm both sides. Solder the same wire into all the other large holes and file the front back to about 0.5mm and the rear flush. An easy way to do this is to make U shaped bits of wire and solder in pairs. The excess can be cut off before filing.

Drill a 0.7mm hole in your work board and plug the remaining wire on the back into it so that the backhead lays flat. Solder the firedoor 33 over the opening, hinges on the right, then drill 0.4mm into the holes either side of the protruding wire. Fit all three glands 34 onto the three wires and solder. The regulator guide 36 folds up as per the drawing and fits above the gland. The lever 35 goes on the 0.7mm wire, angled to the right with a short piece of wire fitted in the end hole to make a handle. Trim the 0.7mm wire almost flush after all this. The try cocks fit are made from little bits of wire as per the sketch. Solder 0.6mm wire in the L/H two holes and wrap 0.3mm wire around to mimic the handle. Drill out the holes in the gauge glass to 0.5mm and fit short pieces of wire to represent the handles. Use copper wire for the drain pipe. There are two holes in the backhead for the gauge glass but the bottom one came out too high. Drill a new bottom hole using the gauge glass as a guide and fit by soldering from the rear. File all wires at the back flush except the regulator. The backhead assembly will locate in place with the regulator wire protruding from the rear and can be retained after painting with glue or blu-tak.

Saddle tank

Form the shape of the tank wrapper 24 around a rod 3mm diameter, the front of the wrapper is identified by holes, near the outer edge, about 1mm from the front. Solder the front 25 in place flush with the front edge and the rear

recessed by about 1mm or slightly less. The tank fits into slots on the top of the boiler, gluing is easiest, but it is a good idea to fill it with lead before fitting. If you wish to solder the chimney and dome in place, do this before fitting the tank.

Fit the tank bracket 29, the curved part first against the saddle front and the straight strip around the smokebox. The sandboxes 26 fold to shape as per the drawing and fit on the saddle front, slightly in from the edge and about central in height. Round off all edges before fitting as they represent castings. 0.5mm wire will represent the sand pipes but only run them to just behind the frames. Not many Wrens had sandboxes, check pictures before fitting.

Front buffer beam

Push out the rivets in part 9 and solder the two layers of buffer beam 8 & 9 together. Solder the assembly to the front of the chassis with the top edge flush with the frame tops. The two rivet strips 13 left over on the chassis etch fit on the frames against the back of the buffer beam.

Two covers 12 are supplied to go over the coupling holes if required. There is just room to get Kadee couplings in both ends and the slots are the correct size and height, but if you use something else, the cover plates may be useful for resizing or moving the slot. Solder them in place then drill and file any hole required for your couplings.

Castings

Remove from the sprue by snipping with cutters, do not bend and snap them off. Clean up with files and wet and dry as appropriate and try them for fit. If you want to remove the surface roughness from the casting process, use rotary wire brushes in a mini drill and wet and dry paper. The parts can be held in a pin chuck by their mounting spigots for cleaning up and drilling. The chimney will need a small amount removed from the rear of the base to clear the saddle tank bracket then solder it in place. All the rest can be soldered or glued as you wish.

Drill out the holes under the dome spigots to take 0.5mm wire, it is easiest to drill right through and trim the excess wire flush after fitting. Fit hand wheels to all three. The injectors plug into the holes either side of the firebox and the wires run to the other items as shown in the sketch. You can fit the dome and injectors then trim and fit the injector wires with glue, or you can have a trial run, trim all the wires to length, remove and solder together then fit as one unit. Personally, I would go for the first option. Note that the injectors are handed, check the drawings.

The pressure gauge needs a small hole somewhere around the outside fitted with copper wire. This seems to run down to the filler cap, which fits in the foremost hole on top of the firebox. Solder the gauge to the cab front and finish the wire just in front of the cap. There are three filler caps, two the

same for the sandboxes and a slightly smaller one for the boiler, but you need to look carefully as they are very similar.

Cut the long wire off the whistle a file it almost flush. The whistle goes in the hole furthest back on the firebox with the lever pointing to the left. The cylinder covers fit with the non recessed edge nearest the centre of the loco. If your loco is to have wick type lubricators, drill the centre holes 1mm and fit a short piece of wire to represent these. If a mechanical lubricator, drill 0.5mm and run wires to the lubricator (not supplied). If no visible lubricators, just fill in the dimples.

The handbrake standard fits in the hole in the L/H footplate. Cut the mounting spigot down so that it ends up flush underneath and try for fit. Bend the tag so that it touches the rear frame and holds the standard vertical, cut off excess tag so that it does not show below the frame and solder to the floor and frame.

Finally

If you want dumb buffers, these are best made from lead sheet. None are included as castings as there are several sizes to choose from. Use the roofing lead supplied folded double and soldered together with normal solder. Cut to the size required and solder in place with low temperature solder after tinning the buffer beams first.

Put the two parts of the smokebox door hinge 30 together, trapping a piece of 0.5mm wire between them in the grooves and solder. Bend the hinge plate so that the hinge body will lay flat on the smokebox front when the hinge is soldered to the door. Glue the assembly in place. There seems to be a single dog retaining the L/H side of the door. If you wish to fit this, drill a 0.5mm hole in the relevant place and fit a short piece of wire bent over.

There are several levers visible in the footplate area for such things as dampers and sanding. If you wish to fit the visible parts, use the waste etch to make up what can be seen, but be sure not to permanently join the cab, boiler or chassis as dismantling will become very difficult. Works plates are included, as are Lorna Doone's corporation plates. These are best fitted with glue after painting.

Couplings are up to you but whatever you fit, make sure that the rear one is attached entirely to the buffer beam. One solution if you want Kadees is to solder a plate above the buffer beam slot, slightly narrower than the gap between the frames. This can be used as a base for a Kadee to be glued to, I don't think there is room for a soldered nut and screw.

When dismantling, there should be nothing joining the assemblies. Remove the two screws under the cab, tilt the cab back a little and pull backwards to unplug the buffer beam wires. Remove the screw under the boiler, lift the front at an angle and lift off upwards. This will free up the cylinder assembly

but the fly cranks will need to be unsoldered to go any further, only do this when major repairs are needed.

Designed and produced by Mark Clark - Locos n Stuff

Website – www.locosnstuff.co.uk

Enquiries, technical help – borsig1958@gmail.com or 01634 575081 before 8pm
12 Adelaide Road, Gillingham, Kent, ME7 4NJ

Parts list

1 – Footplate L/H
2 – Footplate R/H
3 – Valence x2
4 – Bunker L/H
5 – Bunker R/H
6 – Bunker trim long x2
7 – Bunker trim short x2
8 – Buffer beam front inner
9 – Buffer beam front outer
10 – Buffer beam rear inner
11 – Buffer beam rear outer
12 – Coupling plates x2
13 – Boiler wrapper
14 – Smokebox wrapper
15 – Smokebox front
16 –
17 – Firebox rear
18 – Firebox front
19 – Boiler backhead x2
20 – Smokebox saddle
21 – Smokebox base
22 – Smokebox side covers x2
23 – Smokebox plates x2 (not used)
24 – Saddle tank wrapper
25 – Saddle tank ends x2
26 – Sandboxes x2
27 – Cab front
28 – Cab roof
29 – Saddle tank bracket – 2 parts
30 – Smokebox door hinge – 2 parts
31 – Cab rear gusset plates L/R
32 – Cab Reverser – 6 parts
33 – Firebox door (in part 18)
34 – Regulator glands x3 (in part 18)
35 – Regulator lever (in part 18)
36 – Regulator guide (in part 18)

Locos n Stuff
Industrial and Narrow Gauge
• by Mark Clark •
borsig1958@gmail.com
01634 575081 before 8pm

Kerr Stuart Wren 0-4-0ST chassis

General

Refer to the drawings for details on folding parts to shape. The etched lines will be on the inside of the fold which will be to 90°, unless specified fold double, when the etched line is on the outside. Do not clean the etched cusp off of the edges of parts unless the edges will be visible after building, just remove the joining tags. With parts that are layered, clean off the tags after soldering as it is less effort and gives a better finish.

Small or long parts are hard to fold, but the job can be made easier by scoring the etched line two or three times with the back of a knife tip. Do this on the long strip at the top of the frames in particular.

Main Frames

Using a piece of scrap fret, check that all the slots in the frames 1 & 2 are clear enough to take the tags of the various spacers. Ream the rear axle holes to take the bushes, then solder them in place with the flanges outside. If building rigid, do the same with the front bushes, if compensating, cut the bearing pieces vertically and snap off the halves. Clean up the edges back to solid metal. Fold the top strips over to 90°.

Fold the spacers to shape and fit the front 3 to one frame and the rear 5 to the other using small dabs of solder. Solder the two frames together in a similar manner and check for squareness. When you are sure that all is square, finish the joints at all the spacer ends. Fold and fit the mid spacer 4, noting that it fits with the arrow pointing up.

Check that the tags on the footplate supports 6 fit into their half etched slots. Fold them to shape and solder in place. Solder a length of 0.5mm wire into the brake hanger holes as shown and cut out the piece between the frames.

Coupling and connecting rods

A jig is supplied to assemble the coupling and connecting rods. If you have more than one temperature of solder, it would help to use the higher on the ends and the lower for assembly. The technique is to cut out the sets of rod ends but leave them joined in twos (28 front) or threes (29 rear and connecting). Fold them in a zig-zag fashion with the etched lines outside, then put an oiled broach through them to hold them in line and solder. Open the hole to fit the relevant pin of the jig. Cut a piece of 1.2mm tube to the length specified, push the spike of the ends into each end of the tube, twist to line up and try for fit on the jig. You may have to shorten the tube slightly to get a good fit.

The small ends of the connecting rods are two layers 30 & 31 folded into a square U shape that fit into each other. When they fit, put a short length of 0.7mm wire in the central hole and solder together. Try for fit on the jig as above.

Put a piece of paper over the pins of the jig to stop the rod parts touching the base, oil the jig pins, put a rod in place, check the alignment of the parts and solder together. File off all folding tags and clean up the solder joints if required. Note that you should end up with a left and right hand set.

Hornblocks

Compensated only - Assemble the hornblocks by following the High Level instructions included. You will need hornblock jigs to fit them to the frames, follow the instructions with them to do so using the rods that you have assembled. To make your own, all you need is a pair of spare 1/8th axles with the ends turned to a taper and two springs that will fit on the axles between the frames to hold the hornblocks in place (see drawings). Make sure that you use the correct rod each side.

Fit the wheel covers 27 with superglue and test fit the wheels using shims 38 as required to take up the side play, 14mm builders may have to file the fixed bushes a little to gain enough clearance.

Compensated only - Try a length of 1mm wire through the holes in the front and mid spacers. The front axle should bear against it allowing it to rock. Place the chassis on a flat surface and check the height at both ends, they should be equal. If not, gently bend the 1mm wire to raise or lower the front. When it is level, solder the wire in place. If the front axle will not rock, check that there is enough side play. If there is and it still won't rock, remove the axle and check that the hornblocks can actually twist a little. The usual problems are blocks too tight in the guides (ease by rubbing on wet and dry), too much solder where the guide touches the frames (scrape away) or axles too tight in their holes (ream slightly larger).

The result required is that with the chassis standing on a flat surface, if one wheel is lifted up with a small screwdriver, the other three should stay on the flat surface and the chassis will tilt a little to accommodate the movement. Only around 0.5mm movement is required but more will do no harm.

Gearbox, motor and pick ups

Assemble the gearbox according to High Level's instructions. It will be either the Roadrunner Compact + or the Slimliner Compact + and may have a final gear with a grub screw or loctite fix, all depending on High Levels stocks at the time of ordering. Before fitting the gears, the movable final drive needs to be locked in position as shown in the drawings, a small spot of solder each side is safer than glue. Do it with an oiled axle through the holes and no gears fitted. Fold up the four legs of the gearbox adaptor 37 and push down the two small tags. These locate into the larger holes on the top of the gearbox. Solder it in place centrally. Fit the gears and the worm onto the motor extension around 5mm from the motor.

I have fitted the worm adaptor to the motor, just ream the worm with a broach until it fits firmly. Slide the motor into the legs of the adaptor and check the mesh. These gears need a loose mesh as they don't wear and will not "run in". If the mesh needs adjusting, bend the legs a little to adjust. Run the motor leads down the sides of the motor and wrap masking tape three times around the motor and legs to hold things in place. Try under power; it should be smooth and quiet. When happy with the adjustment, you can loctite the worm in place and glue the motor to the cradle with an epoxy resin. My test build has still got the masking tape round it and I see no reason to glue it, so you could just leave the tape if you wish.

If your kit comes with a Mashima 10/15 motor and Branchlines gearbox, assemble according to the instructions included and position in between the frames with the gearbox pointing backwards and the motor vertical. The worm wheel cannot be central in this gearbox, a side effect of making it so narrow. It doesn’t matter which way round you position it. You will not need the extra piece of PCB mentioned below.

PCB and phosphor bronze wire is included for making wiper pick ups. These need to avoid the brake rods, so might be best fitted a little later. Due to the short leads on the motor, an extra piece of PCB is required under the rear spacer as a connector. Cut a piece 8mm long, file a gap in the centre and glue it under the spacer but not fouling the boiler slots or touching the frames. Connect wires from the pick ups and motor to here.

Wheels and rods

Reassemble the gearbox and wheels back into the chassis but do not fix the final drive gear if it is a loctite type. If you do, you will have to remove the motor to push the chassis which may give problems re-establishing the mesh of the worm and wheel. Fit the crankpins and shorten two bushes by placing

them in the front rod holes and filing almost flush. Fit a coupling rod and check that it rotates freely by pushing the chassis gently along a surface. If it binds at the horizontal position, remove and open out the holes a little until it pushes freely. Remove and repeat with the other side. Fit both rods and check again. If OK, fix the final drive gear with bearing lock or superglue, being careful not to get any in the bearings, then test under power. Do not oil it until all is working as oil will mask any problems. Snip off the excess front crankpin and file the face of the bush to about half thickness. Round off the edges of the bush face to prevent it catching on the back of the crosshead.

A Tip

When shortening crankpins and bushes the ends will be flat, this makes it difficult to screw the bush back on again. Gently bevel the end of the crankpin thread with a file and lightly countersink the hole in the bush with a 1.5mm drill held in fingers only. This will put a tapered lead on both making assembly a lot easier.

Brake gear

Assemble the brake hangers 16 and shoes 17 onto a piece of 0.5mm wire in a hole drilled in your board. Make sure you end up with two opposite handed ones. Fit 0.5mm wire through the holes in front of the rear wheels and solder in place. Position the hangers, long leg upwards on the wire with the front face flush with the wheel face and solder in place. Push out the rivets in the brake shaft brackets 18 and solder into the etched pockets near the rear of the frames. Pass 1mm wire through these brackets with the brake levers 19 between the two brackets; solder the wire to the brackets only. Trim the R/H side almost flush but leave 5mm on the left.

Pass 0.5mm wire through the bottom of the brake hangers with the pull rods 15 between; solder to the hangers only. Pass 0.5mm wire through the brake levers with the pull rods between, position the pull rods about 1mm inside the frames and solder to the hanger wire. Position the levers against the pull rods and solder to both wires. Make up the handbrake levers 41 as shown in the sketch and fit to the L/H end of the brake shaft, at a slight angle pointing down and rearwards. Trim the ends of all wires almost flush and remove the section between the two brake levers. Later you will need to add a short piece of wire vertically between the two layers of the handbrake levers, but you will need the cab floor in place to get the length right. Do not solder it to the floor.

Cylinders and motion brackets

Remove and clean up the cylinder stretchers 7 & 8 for your chosen gauge. Be careful with the rear 8 as it is delicate until fully assembled. Open out the holes to take the 1.2mm tube and fit the stretchers into their slots in the frames. Bend the top flaps of part 8 down until they touch part 7. They need to be soldered to the rear of part 7, flush with the top edge and may need a slight trim. Do not solder any parts in this section to the frames. Cut two

10mm lengths of tube and fit one in each side with the front end flush with part 7, solder at both ends from inside the cylinders.

Bend the tags of the motion bracket layers 9 & 10 and lay the parts together, lining up the edges. Solder and clean up all round. Try for fit, the layers will keep the part central on the frames but may need a gentle trim to fit.

Parts 14 join the various parts of the motion together. They will drop into the slots from above and can be secured with a spot of solder at each join. The arrow points upwards and the writing should face the frames. The mounting plate 40 fits onto the pairs of pegs at the rear. Remove from the frames before soldering fully all the joints. Something that I did not foresee is that part 14 will foul the top of the hornblock guides and an area needs to be removed to prevent this. Also the rear ends may foul the gearbox depending on the angle the gearbox is set at, this needs to be looked at as well. Both these problems are best attended to after assembling the cylinders, motion bracket and mounting plate 40, which can then be test fitted and all will become obvious.

Fit the cylinder covers, 11 front and 12 rear, after pushing out the bolt heads. Position them so that a gap is at the top centre. Pre-curve the cylinder wrappers 26 around a suitable drill shank and solder in place. Fit the cylinder glands over the valve rod holes at the rear of the cylinder assembly, and a 2mm length of 1mm wire into the front holes to represent the guide tube.

Note – the bolt heads on the cylinder covers seem to have disappeared somewhere between my drawing and the final etch. There are 6 equally spaced around the outer ring of the covers, which can be added with a rivet press or left off as you prefer.

Crossheads and slidebars

Fold the ends of parts 25 double against the rest. Fold the end of part 24 into a square U and fit it over the end of part 25, solder together. Repeat for the other set then clean up all edges.

With the etched line at the top of part 21 outside, fold the strip flat against the back. Pair up with a part 22, put an oiled broach through the hole and solder together. Fold a part 23 into a square U and fit it on top of the part just made. Hold it with pliers from above and slide a slidebar into the gap. Adjust the fit of the two parts until they line up and the slidebar is free to move in and out. Carefully remove the slidebar and solder the other parts together. Retest the fit of the slidebar and clean up as required to get an easy fit. It will help to remove the sharp edges of the slidebar with a file.

When it seems OK, repeat with the other side the keep the parts together as matched pairs. Drill out the piston rod hole carefully to 0.7mm and solder a 12mm length of NS wire in each one. When you look at the crosshead from underneath you will see that it is not central to the slidebar. I usually put the

one with the crosshead to the right on the right hand cylinder and vice versa, but it is only 0.2mm off centre and it really doesn't matter which way round they go. Countersink the back hole of the connecting rods with a 1.5mm drill in fingers only. Fit the rods to the crossheads with the 14BA screws fitted from the rear. Do not over tighten the nut as the rod must move freely. Later, when all testing is done, glue or solder the nut to the screw and trim off the excess screw. File off any sharp edges on the screw head to prevent it catching on the leading crankpin.

Clean up the 1.5mm pieces of tubing and solder onto the protruding 1.2mm tube at the rear of the cylinders. Leave the centre tube slightly longer and trim both sides so they are the same. With the cylinders and motion bracket in place, trial fit the slidebar and crosshead on one side. The thick part of the slidebar should rest on top of the 1.5mm tube and the rear end should be under the end of the motion bracket. The slidebar needs to be parallel to the frames, sloping down towards the rear and the crosshead needs to move freely. This is not easy to achieve, unless you have four hands the size of a six year old, but persevere.

When you think you have it about right, tack the slidebar to the cylinder tube only. You can now re-adjust a little before tacking the rear end in place. If things still aren't quite right, melt the solder at one end and move it slightly. Keep doing this until the bar is in the right place and the crosshead moves freely. Repeat with the other side. Fit one connecting rod end to the rear crankpin with a threaded bush and test. You may need to very slightly joggle the ends of the connecting rod to get it to line up. Repeat with the other side.

Valve Gear

The moving parts of the valve gear are assembled with needlework pins, the heads of which will need reducing in a mini drill with files. Aim for around 1mm or less across and less than 0.5mm thick. When assembling parts with the pins you have several choices; you can oil the joint, apply graphite paste or use a paper washer. All methods work but I find the graphite paste more reliable generally. Oiling is more suitable for forked joints where graphite is difficult to apply, which doesn't apply to this loco. Use whichever method you are happiest with.

Layer the valve rod inners 33 and outers 34 together; also the fly cranks 35 in pairs. Reduce the heads of four pins in a mini drill to less than 1mm and squarer looking. Do another two to a size that slide comfortably in the slotted square tube. You will need to clean up the slots with files and wet and dry first. Fold the valve rod ends 32 as per the sketch and fit to a 30mm length of 0.7mm nickel silver wire as shown. The front joint is a dummy, a proper joint here would be impossible to assemble and far too fragile. Slide it up the wire until it is 23mm from the rear joint and solder in place.

Fit the slide pins at the top of the valve lever, with a 1mm washer 39 against the back of the lever, a piece of card can be used as a spacer while soldering.

Enough clearance is required for the pin to slide easily without being sloppy. Assemble the valve rod to the lever as shown with the pin from the front using oil, solder mask or paper to prevent the whole lot being soldered solid. Do the same with the fly cranks. This part can go horribly wrong so be quick with the soldering iron and don't be afraid to take it apart and start again if it all goes wrong.

The valve trunnions need to be drilled out to 1mm, test that wire will pass through. Fold the Hackworth backing plates 42 double, solder centrally to the back of the square tubes and drill the hole right through 1mm. The length of the finished slide should be 6mm. Cut a length of 1mm wire 24.5mm for 16.5 gauge or 22mm for 14mm gauge. Clean up all the sides of the slide and fit one on the wire, soldering securely in place. Slide the trunnions on the wire with the small ends pointing outwards and fit, but don't solder the other slide. Lay this assembly on its mounting plate then try the lever assemblies one at a time, then both together to see if everything fits and moves freely. You may need to make very slight bends in the lever to get it all to line up or shorten the 1mm rod slightly.

If all seems OK, slide the trunnion away from the loose slide and solder in place. Put a spot of superglue under each trunnion to locate it in place. It should be directly above the centre of the wheels. Position a fly crank as shown in the sketch, oil the connecting rod end and solder to the bush outer face and screw. Test and repeat with the other side. Once the trunnions are fitted, the slide pins can be engaged by turning the slides horizontal. Both sides must be fitted at the same time using your two pairs of six year old hands. To operate reliably the slides need locking in place. Tilt backwards (for forward gear) about 20° and apply a tiny spot of superglue to one trunnion. This will stop it rotating in use but won't prevent disassembly later if required.

Finally

The frame rivet strips 13 will be used when you assemble the front buffer beam. Extended running is a good idea to run in the various metal parts. If you wash off the oil and apply Brasso, it will only take about 30 minutes, but you must not let the motor get too hot and you must clean off the Brasso and re-oil afterwards.

Designed and produced by Mark Clark - Locos n Stuff

Website – www.locosnstuff.co.uk

Enquiries, technical help – borsig1958@gmail.com or 01634 575081 before 8pm
12 Adelaide Road, Gillingham, Kent, ME7 4NJ

Parts list

1 Mainframe R/H
2 Mainframe L/H
3 Front spacer
4 Mid spacer
5 Rear spacer
6 Footplate supports x2
7 Cylinder stretcher front - 14 or 16.5
8 Cylinder stretcher rear - 14 or 16.5
9 Motion bracket - 14 or 16.5
10 Motion bracket overlays - 14 or16.5
11 Cylinder front covers x2
12 Cylinder rear covers x2
13 Frame rivet strips x2
14 Motion bracket braces L/R
15 Brake pull rods x2
16 Brake hangers x2
17 Brake shoes x2
18 Brake shaft brackets x2
19 Brake levers x2
20 Cylinder glands x2
21 Crosshead fronts L/R
22 Crosshead rears L/R
23 Crosshead tops x2
24 Slidebar tops x2
25 Slidebar bottoms x2
26 Cylinder wrappers L/R
27 Wheel covers x4
28 Rod end sets front x2
29 Rod end sets rear and connecting x4
30 Connecting rod end inners x2
31 Connecting rod end outers x2
32 Valve rod ends x4
33 Valve lever inners x2
34 Valve lever outers x2
35 Fly crank x4
36 Hackworth rod assembly jig
37 Gearbox adaptor
38 1/8th axle shims x8
39 1mm washers x12
40 Cross shaft platform
41 Handbrake levers x2
42 Hackworth slide backing plate x2
43
44

HIGH LEVEL

www.highlevelkits.co.uk

These instructions cover three types of High Level Hornblocks:

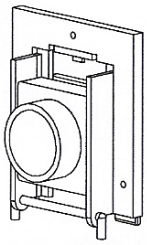

STANDARD

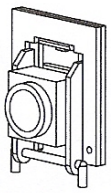

MINIBLOX

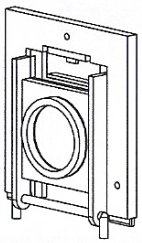

SPACESAVER

Although their size may differ, the procedure for folding the hornblock etch is the same for each type.

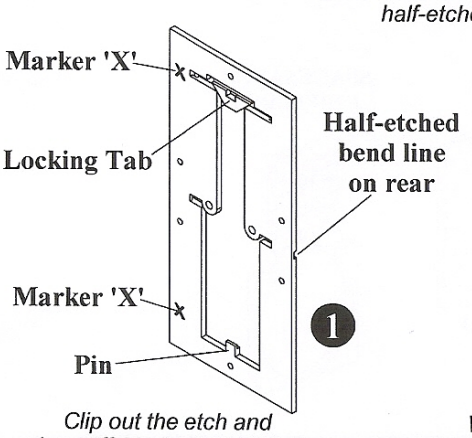

Clip out the etch and clean off any mounting tabs.

Fold the etch through 180 degrees, so the markers 'X' face each other. The half-etched line is on the outside of the fold.

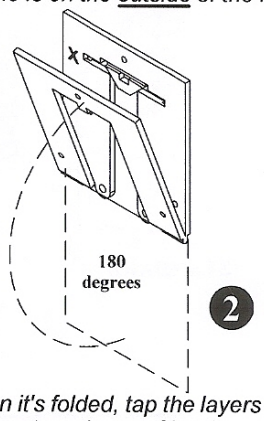

When it's folded, tap the layers between two pieces of hardwood, so they sit absolutely flat.

Hold the layers tightly together and fold the locking tab through 90 degrees, so it locates on the small pin.

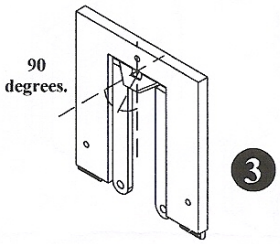

The end of a flat, pointed needle file is a good tool for this job. The tab locks the layers together, eliminating the need for solder.

Use flat nose pliers to grip the main etch, with the straight edge of the pliers close to the bend line.

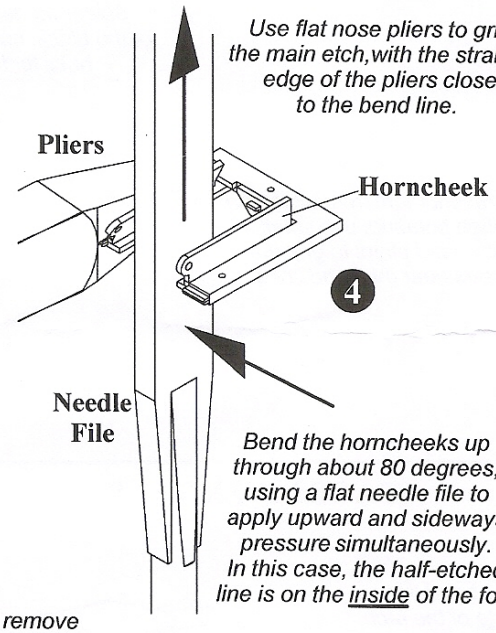

Bend the horncheeks up through about 80 degrees, using a flat needle file to apply upward and sideways pressure simultaneously. In this case, the half-etched line is on the inside of the fold

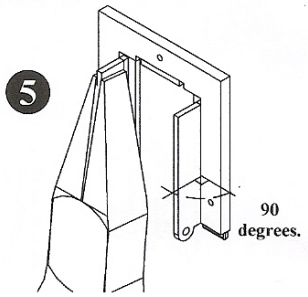

Finish off the horncheek bends so they are at 90 degrees. Check this through a magnifying glass and adjust as necessary.

For SpaceSaver 'CSB' units, follow the instructions (overleaf) at this point...

Use fine emery to clean up the bearing, remove any burrs and then try it in place - the groove on the block locates on the front layer of the etches.

If the bearing's tight in the etch, check that these edges aren't 'bottoming out' in the groove...

...If they are, use a file to remove the sharp 'cusp' from the edge of the etch...

... so there is clearance in this groove...

...then polish the bearing's side faces until it's a smooth, sliding fit in the etch.

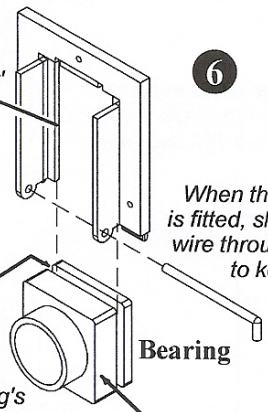

When the bearing (and tag) is fitted, slot a length of 0.4mm wire through the bottom holes to keep it in place.

To fit Standard or MiniBlox 'CSB' Tags, turn to the instructions (overleaf) at this point...

The completed assembly can now be soldered to the inside face of the chassis, using axle jigs. If you fit it with the bearing in place, make sure the sliding surfaces are lightly oiled, to prevent the bearing being soldered to the etch.

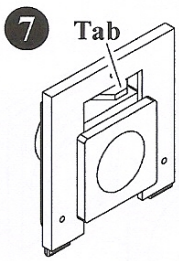

The top edge of the cut-outs on most loco chassis is 4mm above the axle centre. For 'Standard' and 'SpaceSaver' hornblocks, butt the tab up to the top of the cut-out, to set the unit at the correct height.

For MiniBlox, the top edge of the tab is 3mm above the axle centreline.

HIGH LEVEL, 14 TUDOR ROAD, CHESTER-LE-STREET, CO. DURHAM, DH3 3RY.
TEL. 0191 3882112.

RoadRunner Compact+ 30/40/54:1

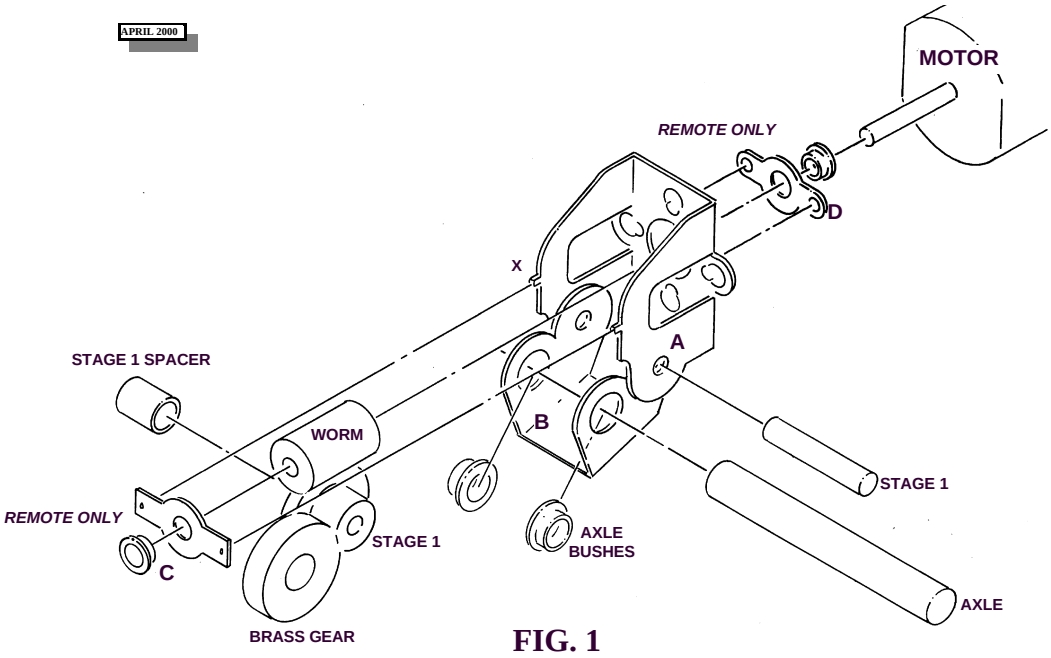

FIG. 1

Study Figs 1 and 2. Before cutting the gearbox etch from the fret, progressively ream out each of the **holes** to the sizes shown in Fig 2. Components should be offered up until they a tight push-fit in their holes. Once the gearbox is assembled, the shafts are fixed but the gears are free to revolve. Remove burrs by inserting the tip of a drill bit (of much larger diameter than the hole) and gently rotating it between your fingers.

Solder the **1/8in bushes** into place on the final drive carriage (B) with the larger-diameter shoulders on the *same side* of the etch as the bend lines. File the outside (non-shouldered) face of the bush flush. Remove burrs as above. Check that the motor mounting screws will pass though their holes and into the motor, carefully opening out the holes in the etch with a reamer if necessary. Opening out the holes allows you to move the motor vertically in order to adjust the mesh. Some modellers may prefer a deeper mesh (especially for a heavily loaded loco) but avoid 'bottoming out' the gears. If the mesh is too shallow, the gears may wear or even come out of mesh.

The kit includes the additional etched components (C, D) you will need to convert the gearbox into a remote-drive system, using cardan shafts linked to the motor by universal joints. The last will need to be sourced separately - Formil, Branchlines, NWSL and Exactoscale produce suitable designs. As the diameter of the input/output shaft varies between makes, you will need to provide your own bearings to fit into our remote drive attachments. For 1.5mm or 2mm shafts, ordinary ‘straw hat’ bearings available from Gibson, Sharman etc. will work reasonably well but for a proper engineering job, try to get some turned up from sintered bronze. The worm driveshaft should ideally be of hardened steel (like a motor shaft) but again, the silver steel supplied with the kit will do at a pinch. Before beginning construction, read the notes overleaf, covering remote drive attachments.

If you intend to use the **remote drive attachments**, open out their central holes to accept either a 1.5mm or 2mm bore bush, depending upon the diameter of your motor shaft. Solder these bushes into their holes, making sure they sit dead square.

Now cut the etches from the fret with a heavy blade and trim off the tabs, taking care not to accidentally remove any locators. **Fold up the gearbox** (A) as shown in Fig. 1, using flat nosed pliers to grip the motor mounting plate near the bend lines when doing so. This will prevent the plate from accidentally buckling across the hole centres. AII bends are 90 degrees, with the bend lines on the inside of the gearbox. Add fillets of solder to the inside of the folds to strengthen the gearbox. If you are using the **remote attachments**, open out the small location holes in the front attachment (C) so they fit snugly over the locators (X) on the main gearbox etch, and then solder it in place. Now fold up the final drive carriage (B) and strengthen with solder, as above. De-flux the gearbox and carriage by scrubbing them with household cleaner, then rinse and allow to dry. If they are likely to be visible then **paint** them black.

Using a carborundum disc in a mini-drill, cut the stage 1 **gearshaft** so its length equals the overall width of the gearbox. Wear effective eye protection – cutting discs can and do disintegrate if they snag. Remove any burrs with a fine file. If shafts are a tight fit, you will only be able to pass them through both sides of the etches if they are truly square. If they won't go through, then the etches haven't been folded accurately. Light finger tweaking should put things right.

Push the **worm** onto the motor shaft until its mid-point is 6mm from the front face of the motor. The worms provided may be either **brass or nylon**, according to type and gear ratio (they are not interchangeable). The nylon type worms should

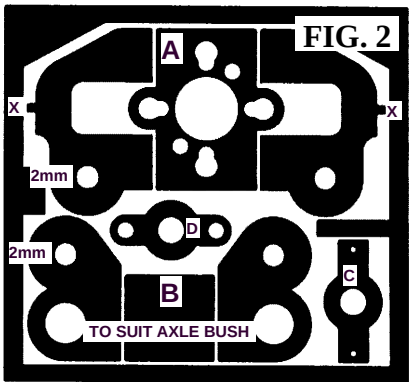

be a firm push fit on the motor shaft. Some brass worms supplied to us are fractionally tighter than others and if they aren't an easy push-fit, they can be gently forced onto the shaft in a vice. Don't use excessive force or the shaft may bend. Instead, use a broach to ease the fit of the worm and then, if necessary, secure the brass worm with a small drop of Loctite 601 at the outer end of the motor shaft.

A variety of **motor fixing holes** is provided, to allow for different screw spacings. We suggest that, if possible, you use the outer (lateral) or the diagonal screw holes, which will allow you to fit (and remove) the motor once the power unit is assembled and installed in the chassis. This will enable you to add wheels, valve gear and other fittings to a free-rolling chassis, and makes it much easier to identify and put right any tight spots or clearance problems.

If clearance restrictions dictate that the vertical motor mounting holes must be used, we suggest that the motor is fitted before the Stage 1 gearshaft and then the latter is lightly glued at one end only. Should the motor require attention, then the gearshaft can be easily removed by gently tapping it out with a drift. If you are using these vertical motor mounting holes, you can now **fit the motor** and worm assembly onto the gearbox and secure it with the fixing screws supplied with the motor.

Refer to Fig. 1. The stage 1 double gear will be one of three types - 15/10T (30:1), 20/10T (40:1) or 27/10 (54:1) - depending on the overall reduction ratio of the gearbox. The **final drive carriage** can be mounted facing backward or forward, depending on the configuration you require.

Offer up the final drive carriage and slot the stage **stage 1 gearshaft** through the gearbox and carriage, slipping on the double gear and spacer as you do so. Sight through the opening in the gearbox sides to check the mesh with the worm - there should be daylight between the gear and the worm, but avoid having too much backlash. If necessary, loosen the motor fixing screws and adjust the mesh. When satisfied, secure the shaft to the gearbox side using a tiny amount of glue. The unit will run smoothly if the final drive carriage is free to pivot about the idler shaft, but suitable restraint must be provided for the gearbox and motor in order to prevent the carriage from curling up on itself when torque is applied. It may be preferable fix the final drive carriage in one position (this position can be determined later, when the gearbox is installed).

Temporarily fit the axle and final **brass 20T**. gear into the gearbox. If the motor is not fitted, check that all the gears revolve smoothly. Now **test the gearbox** under power by fitting the motor and worm assembly as described above. Remove the drive axle and brass gear. Fit the gearbox into the **chassis** by slotting the axle through the frames, the gearbox and the brass gear, making sure the latter is correctly meshed with the stage 1 gear.

Fit washers between the outside faces of the carriage and the inside of the frames, to stop the gearbox/carriage sliding along the axle. The amount of movement may be small but if unchecked it will sandwich the gears together, causing premature wear. Washering will cure this problem. Use extra washers to eliminate all sideplay on the driven axle - aim for a running clearance only. The brass gear should run close up against the side of the carriage, away from the side face of the stage 1 gear. This clearance ('Z' in Fig. 3) must be maintained at all times. When satisfied, glue the brass gear to the axle using tiny spots of Loctite 601 applied with a pin. Rotate the axle to ensure an even distribution of the adhesive.

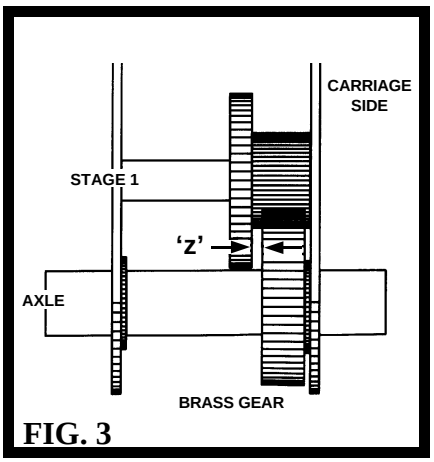

To use the **remote drive attachments** push the worm onto the driveshaft so that 3mm of the shaft is protruding and secure the worm with Loctite if necessary. Slot the short end of the shaft through the motor mounting plate and into the bearing in the front remote attachment (C). Slot the rear remote attachment (D) over the opposite end of the driveshaft and slide it up to the motor mounting plate (The gearbox can be driven from the opposite end by reversing the shaft). Work out how many washers you will need to centre the worm directly over the stage 1 gear and eliminate endfloat. Remove the shaft assembly, fit the washers on either side of the worm and then refit the shaft along with the washers. Secure the rear remote attachment to the motor mounting plate using 12B.A. nuts and bolts through the side holes. With the bolts partially tightened, position the attachment so its circular middle sits centrally over the hole in the motor mounting plate (like lining up a gun sight). Tighten up the bolts and test the gearbox. The worm and drive shaft can be removed at any time simply by unbolting the front remote attachment plate.

The gears are effectively self-lubricating but a little plastics-compatible grease will do no harm. Do not use general-purpose modelling oil, which attracts dust and grit. Metal-on-metal contact areas (motor bearings, axle bushes) should be lubricated with a tiny amount of Zeuthe ultra-adhesive oil.

FOR MORE INFORMATION ON HIGH LEVEL *PRECISION* GEARBOXES CONTACT
HIGH LEVEL, 14 TUDOR ROAD, CHESTER-LE-STREET, CO. DURHAM, DH3 3RY.
WEBSITE - WWW.HIGHLEVELKITS.CO.UK
E MAIL - ENQUIRIES@HIGHLEVELKITS.CO.UK